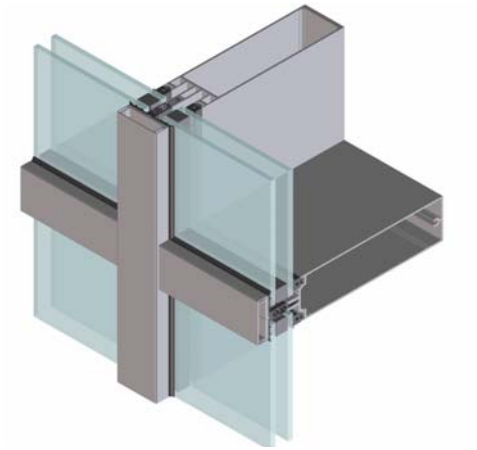

Capped

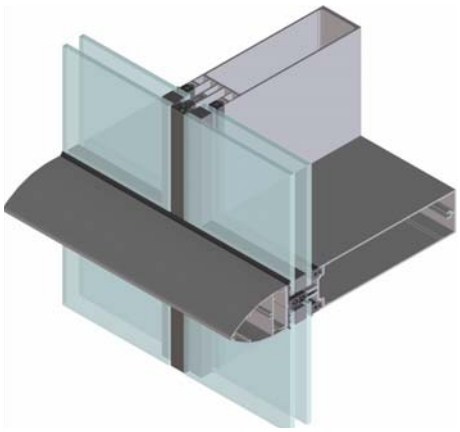

2sided SGH

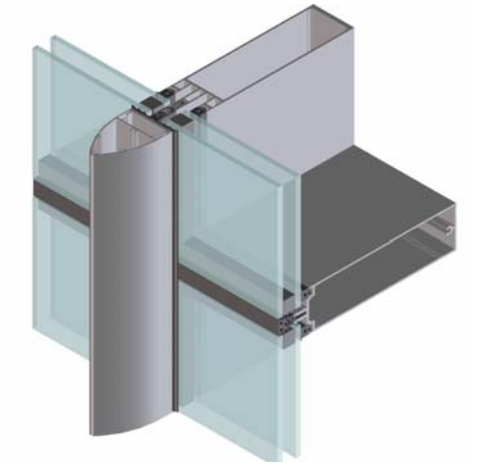

2sided SGV

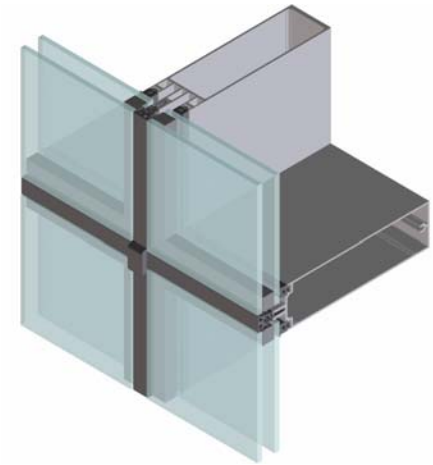

4sided SG

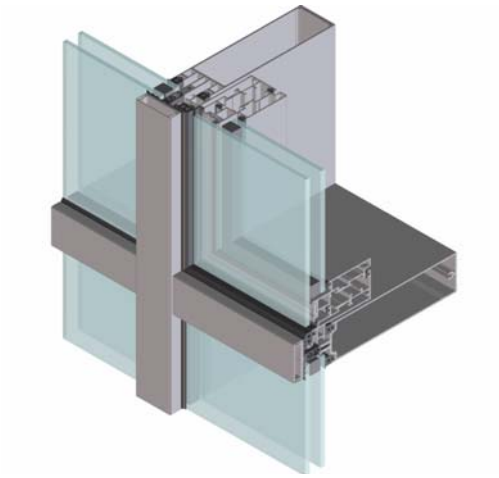

Concealed Vent

Fabricators Guide

Changes reserved
Sous reserve de modifications
Änderungen vorbehalten

Issue: 04
Date :01-14

comar
ARCHITECTURAL ALUMINIUM SYSTEMS

Installation Guide for Erecting Comar 6EFT Curtain Wall System.

---

1 On-site / project conditions

The structural surface to which the brackets will be attached must be rigid steelwork or concrete floor-slabs and must be within tolerances.

- The fixing bolts and inserts must be adequate for structural requirements and site conditions. (Please consult your structural engineer)

2 Wall Brackets

Available are standard brackets 9671, 9672, 9673 & 9674. Strength of the bracket and the size of fixing bolts are to be verified and specified by a structural engineer.

Single or a two-field span?

- Wall brackets must be installed in position as defined and be lined out to allow the mullion to expand freely.
- In case of **a single field span**, one bracket should transfer the wind/dead load and should be fixed. The second bracket (or coupling sleeve) must slide to allow the mullion to expand.
- In case of a **two-field span**, one bracket should transfer the wind/dead load and should be fixed. The middle and the third bracket (or coupling sleeve) must slide to allow mullion to expand.
- During lining-out mullions, mullions can be held temporarily in position with adjustment screws. When mullions are lined out, drill a 12.2 mm hole and mount M12 bolt, washer and self-locking nut M12.

Please refer to EFT Technical Manual section 7 for further details of wall brackets, fixing methods, fixing materials, expansion joints and the choice of a hanging or standing construction.

For details please refer to EFT drawings 7.00 – 7.04.

3 Coupling of Mullions

If the building height requires coupling of mullions, a mullion sleeve of sufficient length must be used. (Minimum length should be 400mm; length depends on position of mullion coupling and wall bracket. Length to be decided and verified by a structural engineer). Also the EPDM mullion expansion moulding (EFT 2030) needs to be installed in such a way to allow the mullion to expand.

- Fix mullion sleeve to one (bottom) mullion only.
- Apply sealant at drainage channel in the top mullion and install EPDM coupling mould EFT 2030.
- Clean off excess sealant.

For details please refer to EFT drawings.

4 Mullion-Transom Connection

The Mullion-Transom connection is designed so that notched transoms are secured to the gasket groove on the mullions.

There are several installation methods such as:
1. Fasten mullions first and clip in transoms afterwards.
2. Fasten pre-fabricated ladders (units of practical sizes) and clip in transoms connecting the ladders. (Please refer to drawing 7.11)

The second option is the most practical method, however, the choice of installation method will depend on the size of the project, the preferred working methods of the fabricator/installer, possible access to the building as well as installation equipment available etc.

For all methods of installation, different mullion-transom cleats and connection components are available:

- When mullions or ladders are installed already, use spring-loaded cleat, EFT 2310, for transom fixing.
- Prefab units (ladders) screw EFT 3022 or transom cleat for transom fixing.
- Transoms must be fixed overlapping the mullion and must be sealed by a special butyl cord EFT 2029 or EPDM seal EFT 2028 and fixed with screws EFT 3021.
- Set torque to fix transom screws EFT 3021 at a turning moment of 2,5 Nm,
- Allow for a minimum of 0.5 mm space for expansion at both ends of transoms.

For details please refer to drawings 7.06 – 7.15.

5 Spandrel and glazing adaptors

For different glass and spandrel panel thickness or segmented facades, glazing adaptors are required, the following needs to be observed:

- Seal the gasket groove at the transom ends.
- To seal the vertical glazing adaptor inject sealant at the end of the adaptor and apply sealant at edges of the horizontal glazing adaptor.
- When the vertical glazing adaptor is bridging a coupling of 2 mullions it is advisable to cut the vertical glazing adaptor approximately 3 mm shorter e.g. CTC – 31 mm to allow the mullion to expand freely.

Installation Guide for Erecting Comar 6EFT Curtain Wall System.

6 Thermal break / Isolator

- Install the correct thermal break size as advised as per glazing tables.

7 Glazing gaskets and EPDM corner mouldings (inner seal)

The inner seal gasket is the most important seal to avoid air and water ingress, Comar 6EFT is pressure equalised allowing small amounts of water into the glazing rebate which is then drained out via the mullions.

Drainage diverters are designed to drain the water out of the system and sufficient drainage and pressure equalisation slots must be punched into the pressure plates, pressure-plate gaskets and cover caps.

- Apply a sealant into glazing groove before installing the corner moulding.
- Cut EPDM glazing gasket size plus approx. 5 % to ensure compression of the gaskets and allow for shrink back. Apply bonding compound and slide/bond gasket into its position.
- Clean off excess sealant.

For details please refer to glazing tables in section 3 and drawings 7.06 – 7.15.

8 Drainage diverter

- Select the correct drainage diverter for mullion drainage as per glazing tables.
- Install drainage diverter and inject sealant mastic into hole provided. To achieve a watertight seal, mastic must cover all edges.
- Apply mastic to seal the drainage diverter to the thermal break.

For details please refer to glazing tables in section 3 and drawings 7.06 – 7.15

9 Glass setting blocks and glazing

- Clean out debris from the glazing rebates and ensure that the drainage routes are clear of obstruction.
- Clip-fit proprietary glass setting blocks into position on the transom making sure that they do not interfere with the drainage grooves. (Approx. 50 mm from corner edge)
- Position 1* or 2* mm thick location blocks (of correct size) onto fitted glass setting block, ensuring that it is positioned centrally in accordance with glazing tables.

*= 2mm block (**7mm gap) for Comar 6EFT curtain wall and Comar 6EFT 2sided horizontal.

Installation Guide for Erecting Comar 6EFT Curtain Wall System.

---

*= 1mm block (**5mm gap) for Comar 6EFT 2sided vertical and Comar 6EFT 4sided curtain walling.

- In accordance with current relevant Health and Safety legislation, use proprietary glass suckers to lift the glass unit, onto the location blocks and fit into the glazing rebate. Ensure that there is a minimum of 5** to 7** mm ventilation gap between the edge of the glass pane and the curtain wall frame, for the full perimeter of the glass unit.
- Check that the internal glazing gasket fits against the glass face correctly with no tucks in the gasket leg.
- Fix glazing aids to hold the glass unit into its position.

For details please refer to drawings.

10 Pressure-plate gasket.

The pressure-plate outer gasket stops water ingress into the system; to ensure a tight seal close attention to this gasket is required in the cruciform area.

Comar 6EFT curtain wall has 2 options for the outer transom gasket e.g.
1 Single gasket EFT 2162 (or 2163) along with pressure plate EFT 1252 or
2 Duo* gasket combination EFT 2150 + 2151 along with pressure plate EFT 1251

When to use Single or Duo* gasket.

Single and Duo gasket options can be used for all EFT curtain walls.

For single transom gasket conditions, EFT 2162 is sealed (butt joint) against the outer vertical gasket EFT 2162.

For duo gaskets conditions, the vertical outer gasket EFT 2162 overlaps the horizontal Duo* gasket and is not sealed.

- Remove vertical fixed glazing aids, at one side of the glass unit only.
- First select the correct vertical pressure plate gasket (as detailed in the glazing tables) minimising butt joints. All butt joints must be sealed.
- Cut gasket straight, size plus approx. 2 % to ensure compression of the gaskets and allow for shrink back, make sure that gasket is not stretched.
- Ensure that drainage or pressure equalisation slots are correctly positioned.

- **Fix vertical pressure-plate** (see item 11)

- Remove horizontal fixed glazing aids.
- Fix horizontal pressure-plate-gasket and cut this gasket straight. (Plus approx. 2 %)

- Apply sealant against vertical pressure-plate-gasket and slide horizontal gasket against vertical gasket into position.

For details please refer to drawings.

11 Pressure plates

- Pressure plate screw connections should be spaced at intervals of 200 mm. The first and last screw should be fixed at 25mm from the ends of the pressure plate and 50mm from the centre of mullion or transom cruciform.
- Use correct screw-type and length in accordance with glazing tables.
- Install vertical pressure plates first, as mentioned under item 10
- Check both the outer gasket and pressure plate, there should be no protrusion in the outer pressure plate gasket and no depression in the pressure plate, it is advisable to set the torque moment of 3,5 – 4,5 Nm, (specific project requirements might require a different value)
- Make sure the slot for drainage and pressure equalisation is positioned correctly.

- When coupling is required (at least every 6.45 m), leave sufficient space between the pressure plates to allow for expansion.
  (Typically there is approximately 1mm expansion per metre of profile but this varies depending on location of the curtain wall and colour of cover-cap which should both be considered)
- Install horizontal pressure-plate and leave a minimum of 2 mm space between vertical cover cap and horizontal pressure-plate to allow for expansion.
  (Cutting size; C.T.C - 54 mm)

For details please refer to drawings.

12 Cover caps

Vertical cover caps need to be 3mm wider than the horizontal to ensure that there are no raw edges.

Cover caps have a typical edge radius of 1,5mm, edge radii for even distribution of the powder coating layer.

<u>Vertical cover-caps</u>

- First install correct vertical cover-cap.
- When coupling is required (at least every 6.45 m), leave sufficient space between the cover caps to allow for expansion.
  (Typically there is approximately 1mm expansion per metre of profile but this varies depending on location of the curtain wall and colour of cover-cap which should both be considered)
- For some cover caps (75mm and higher) a coupling strip will be available to align the cover caps.
- Fix one screw in the cover-cap and pressure-plate at transom (cruciform) location to let cover-cap expand in one direction only.

- Higher cover caps need to be fixed at each cruciform location, preferably concealed underneath the transom cover and if the vertical span exceeds 1.5m, additional fixing points will be required.
  (A special designed pressure plate (EFT 1253) is available to ease the fixing)
- If drainage is chosen through the vertical cover cap it is advisable to divert the majority of water (drained out of the mullion) to the outside approx. every 20 m
  A location can be where cover caps are connected.

For details please refer to drawings.

13 Other?

Further questions or suggestions; or if the standard solutions don't meet your requirements, please do not hesitate to contact our office.

Installation 7

Comar 6EFT

Fixed between floors

7.00

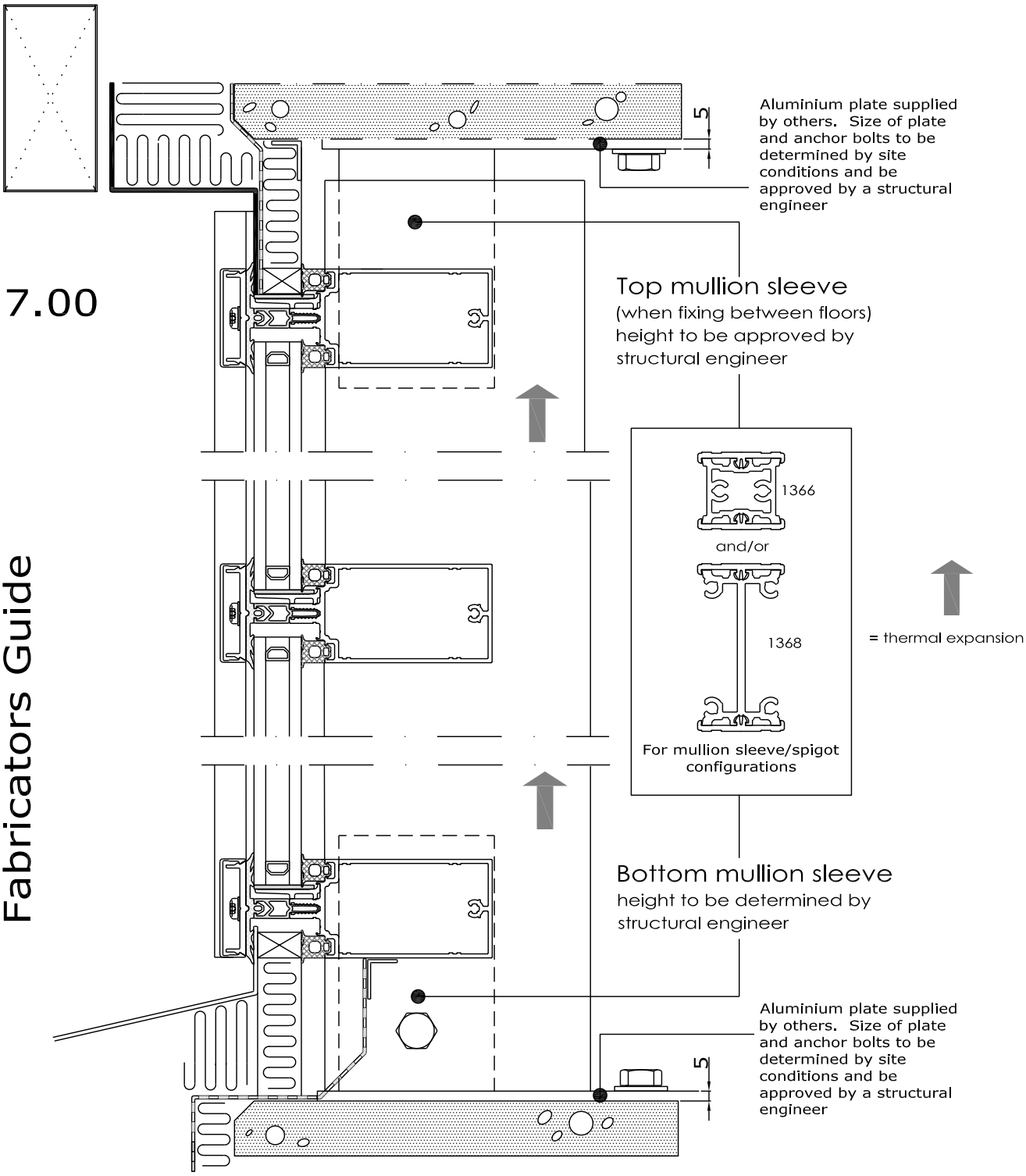

* Standing Construction *

Fabricators Guide

comar
ARCHITECTURAL ALUMINIUM SYSTEMS

Changes reserved
Sous reserve de modifications
Änderungen vorbehalten

Issue: 04
Date : 01-14

Brackets & Couplings

7.01

Fabricators Guide

* Propped Construction *

Changes reserved
Sous reserve de modifications
Änderungen vorbehalten

Issue: 04
Date : 01-14

comar
ARCHITECTURAL ALUMINIUM SYSTEMS

Installation 7

Comar 6EFT

Brackets & coupling

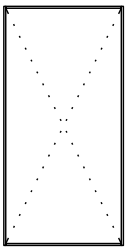

7.02

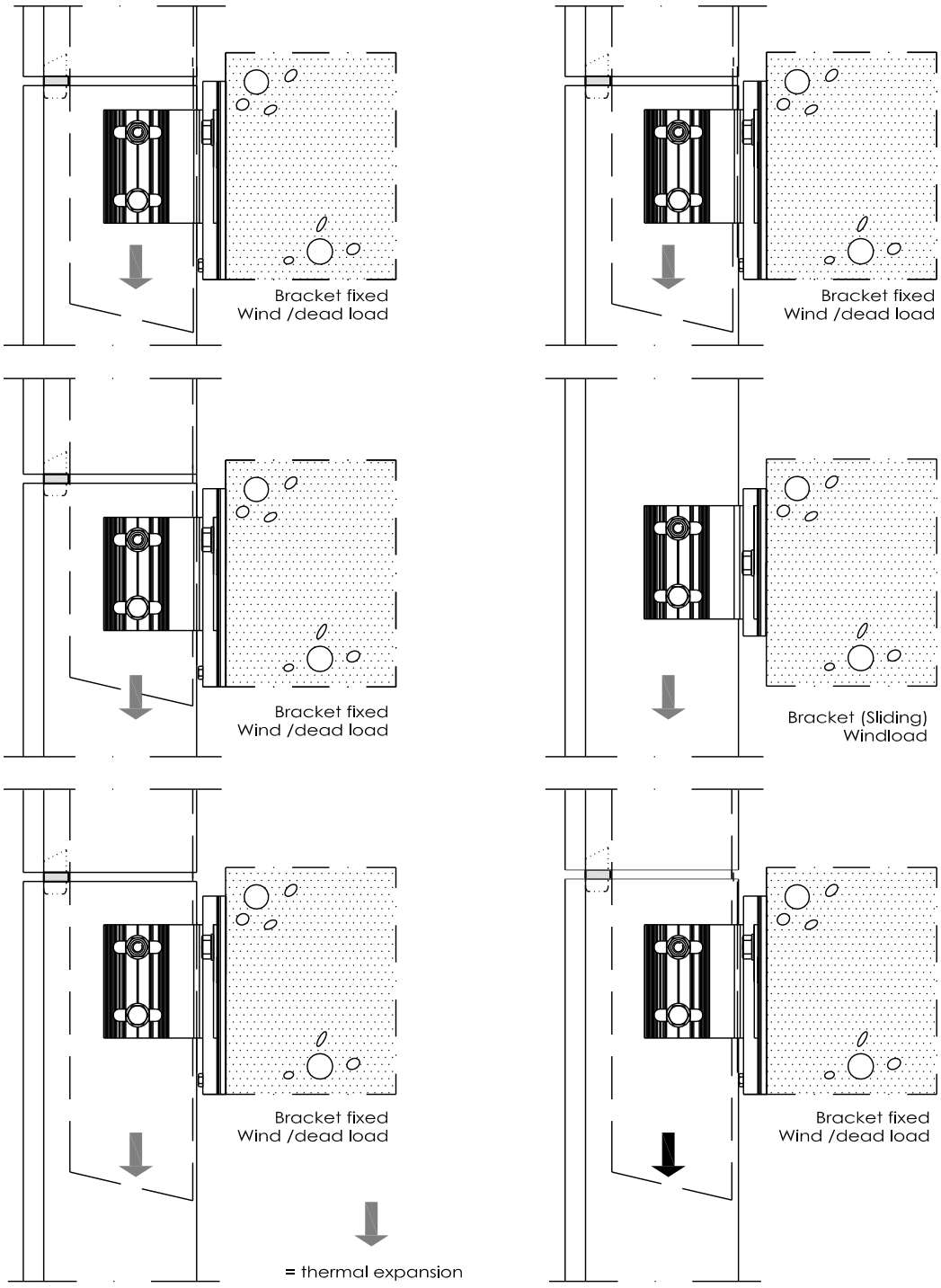

Single Field Span

Two Field Span

* Hanging Construction *

Fabricators Guide

comar
ARCHITECTURAL ALUMINIUM SYSTEMS

Changes reserved
Sous reserve de modifications
Änderungen vorbehalten

Issue: 04
Date : 01-14

Brackets & Coupling

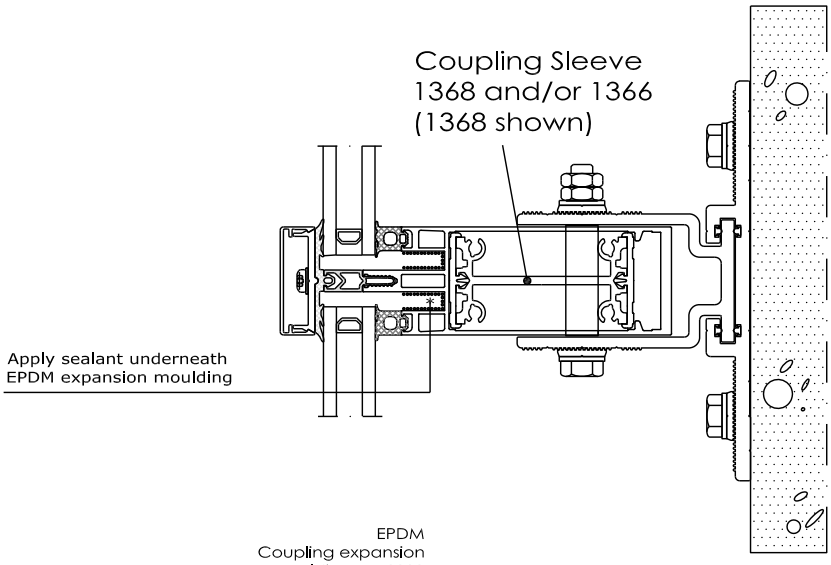

7.03

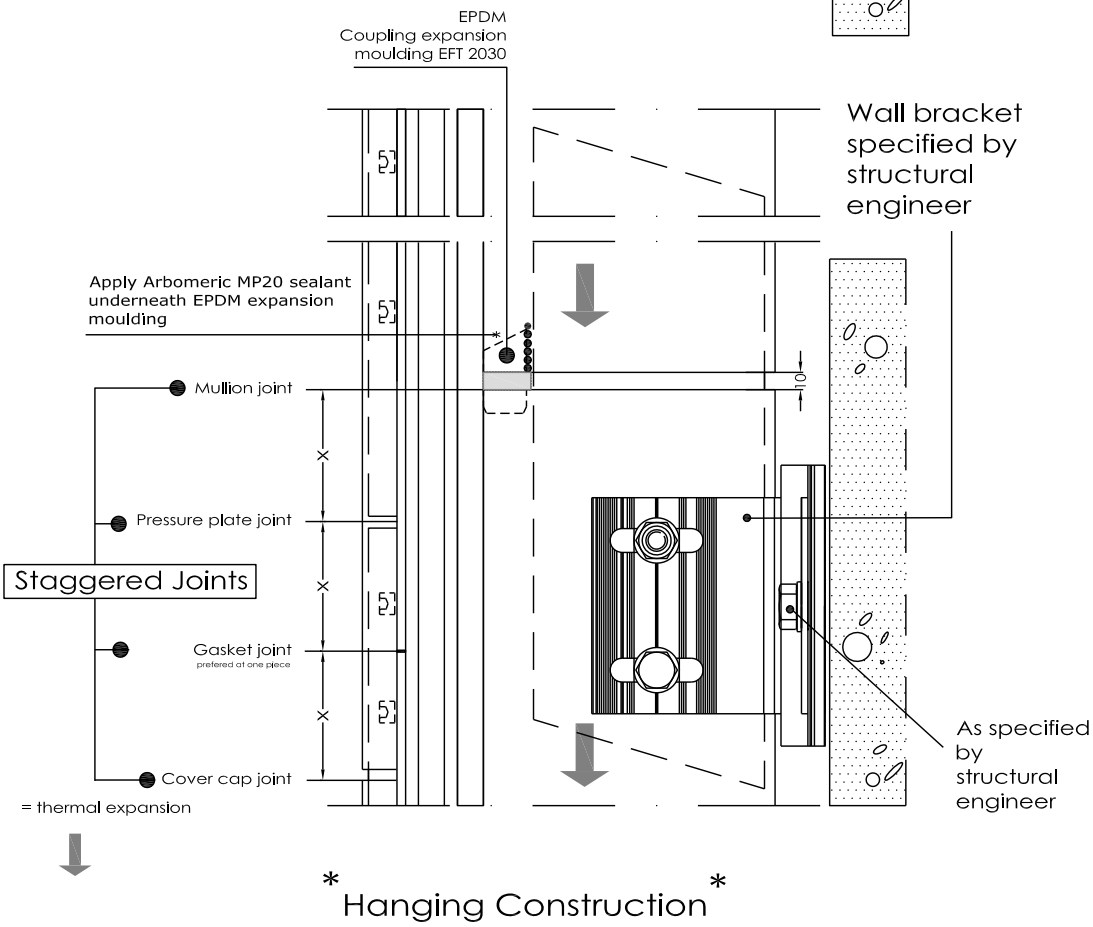

Fabricators Guide

Changes reserved
Sous reserve de modifications
Änderungen vorbehalten

Issue: 04
Date : 01-14

comar
ARCHITECTURAL ALUMINIUM SYSTEMS

Comar 6EFT

Brackets & coupling

7.04

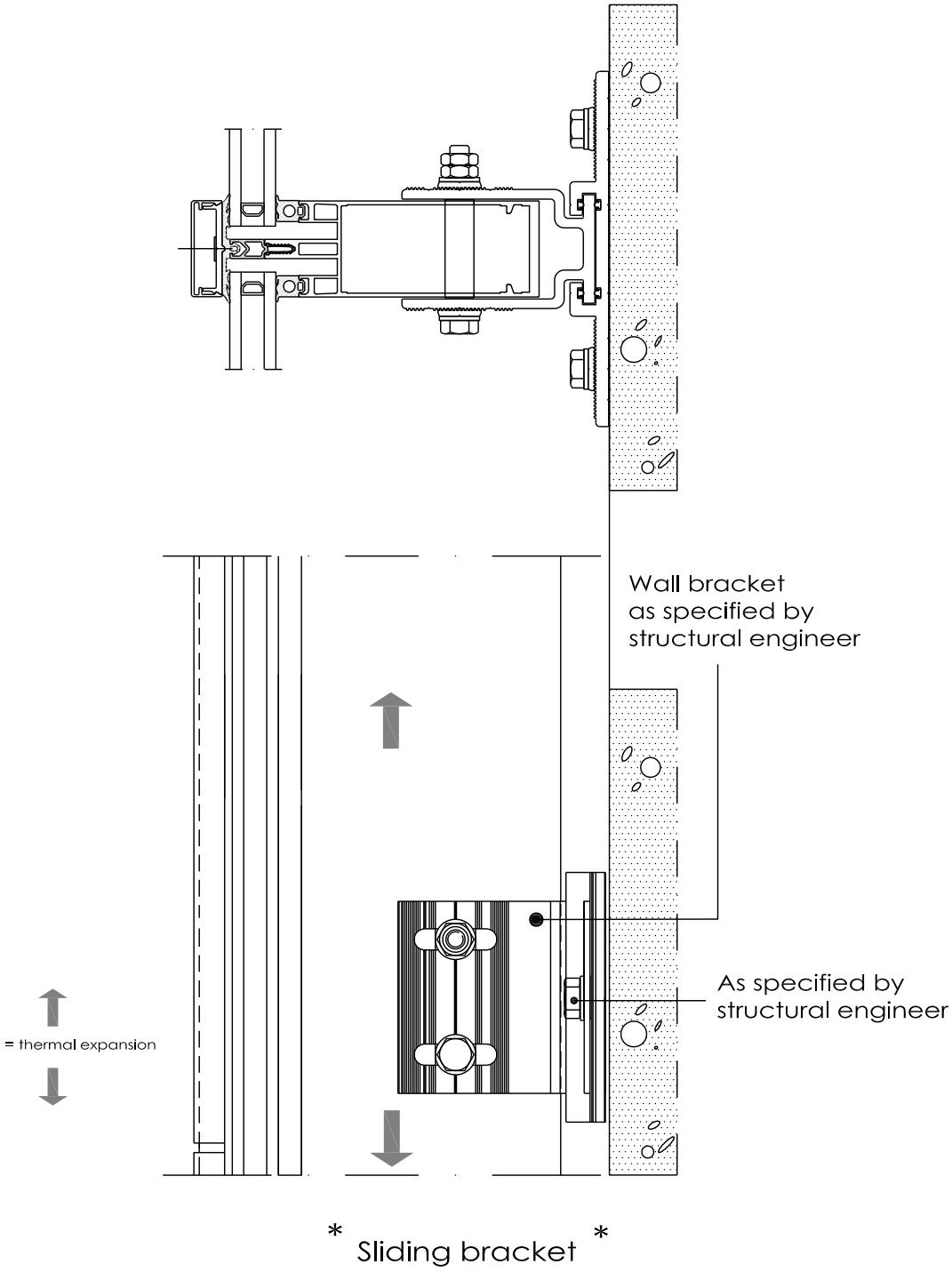

comar
ARCHITECTURAL ALUMINIUM SYSTEMS

Changes reserved
Sous reserve de modifications
Änderungen vorbehalten

Issue: 04
Date : 01-14

Mullion movement joint preparation

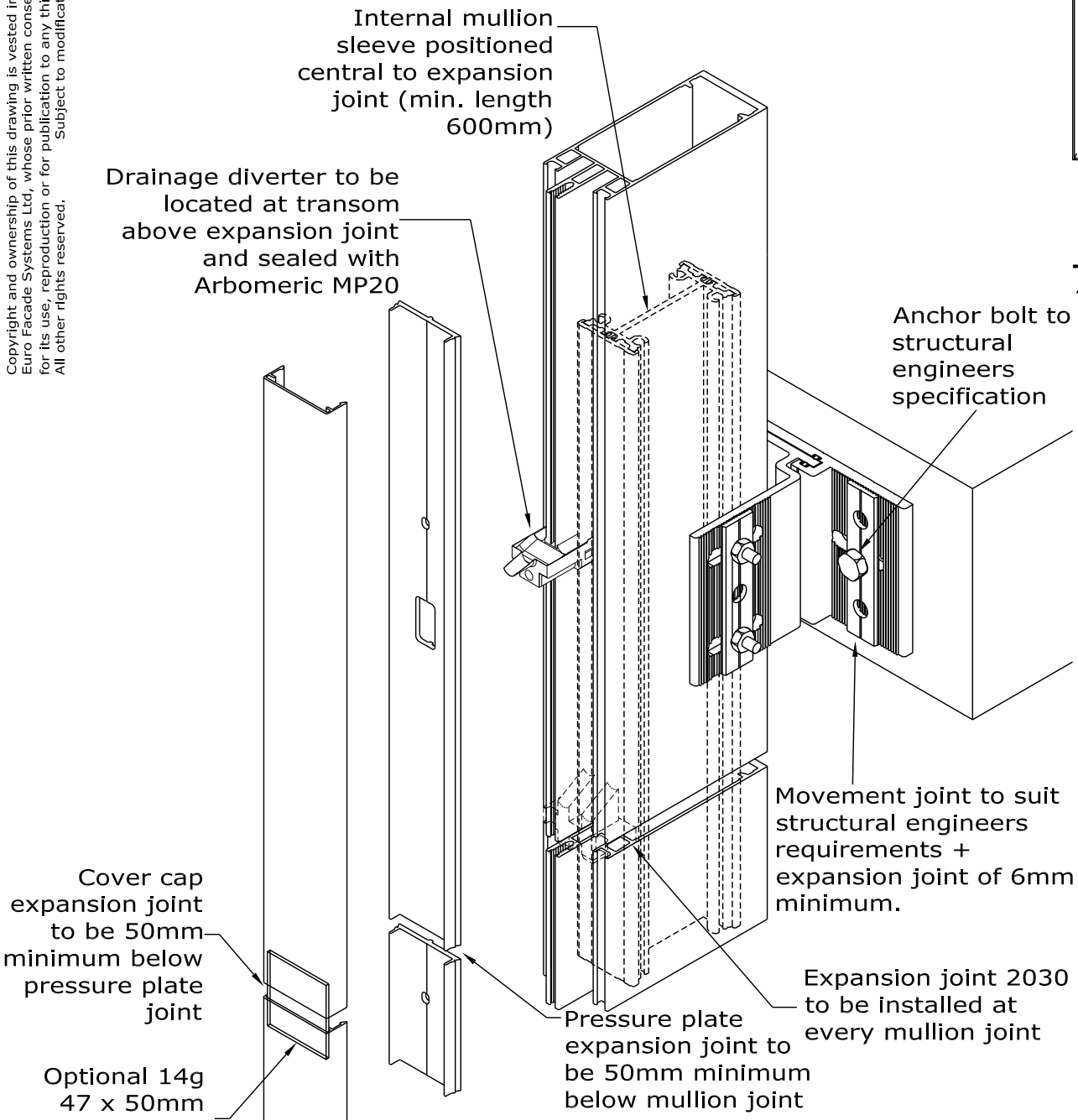

Notes: Bond breaker tape required to spigot section at position of mullion joint and to glass at pressure plate joint

Gaskets omitted for clarity

Installation 7

Comar 6EFT

Mullion sleeve plate
85 mm (1070)
105 mm (1072)

7.06

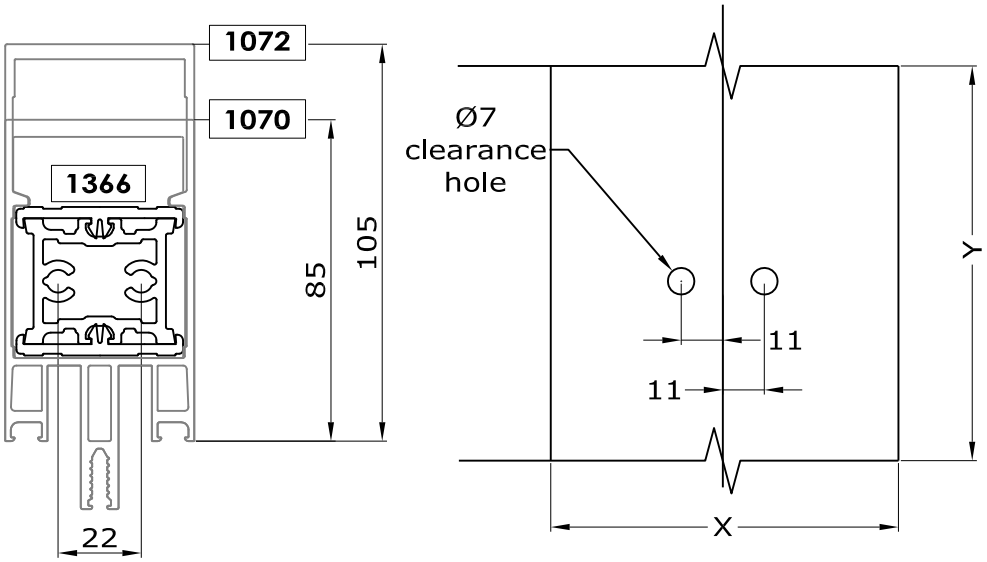

Fabricators Guide

5mm thick aluminium plate supplied by others

Use Ø6.3mm number 14 x 25mm self tapping screw, countersunk (supplied by others) or plate can be welded.

Length & width of plate and anchor bolts to be determined by site conditions and to structural engineers specification.

comar
ARCHITECTURAL ALUMINIUM SYSTEMS

Changes reserved
Sous reserve de modifications
Änderungen vorbehalten

Issue: 04
Date : 01-14

Mullion Sleeve Plate
125 mm (1073), 135 mm (1074)
150 mm (1076) & 180 mm (1078)

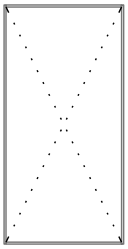

7.07

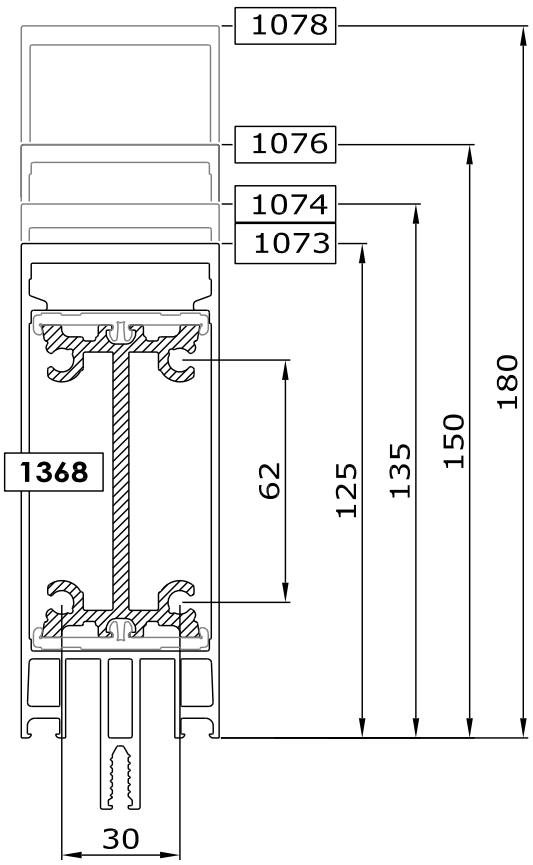

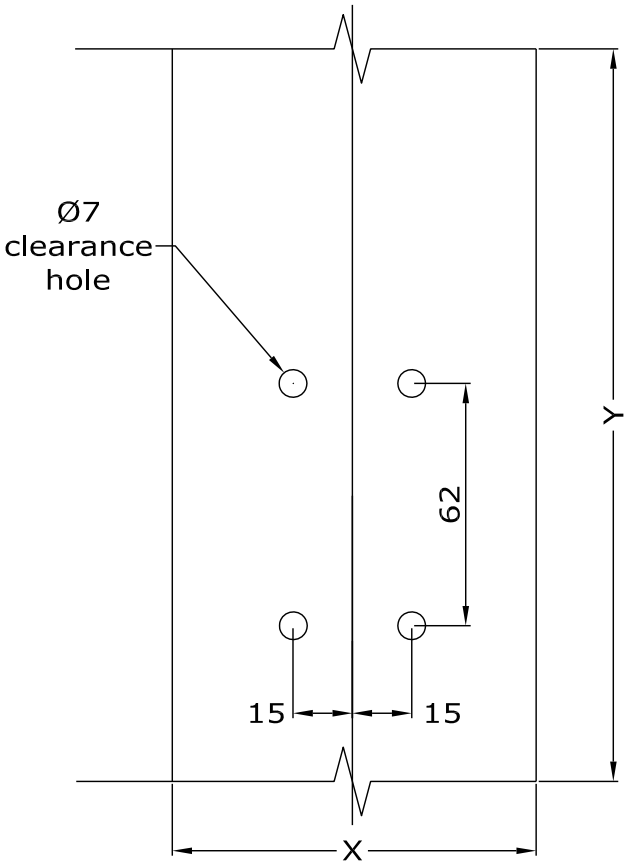

Fabricators Guide

5mm thick aluminium plate supplied by others

Use Ø6.3mm number 14 x 25mm self tapping screw, countersunk (supplied by others) or plate can be welded.

Length & width of plate and anchor bolts to be determined by site conditions and to structural engineers specification.

Changes reserved
Sous reserve de modifications
Änderungen vorbehalten

Issue: 04
Date :08-15

comar
ARCHITECTURAL ALUMINIUM SYSTEMS

Comar 6EFT

Mullion sleeve plate 195 mm (1080)

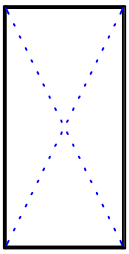

7.08

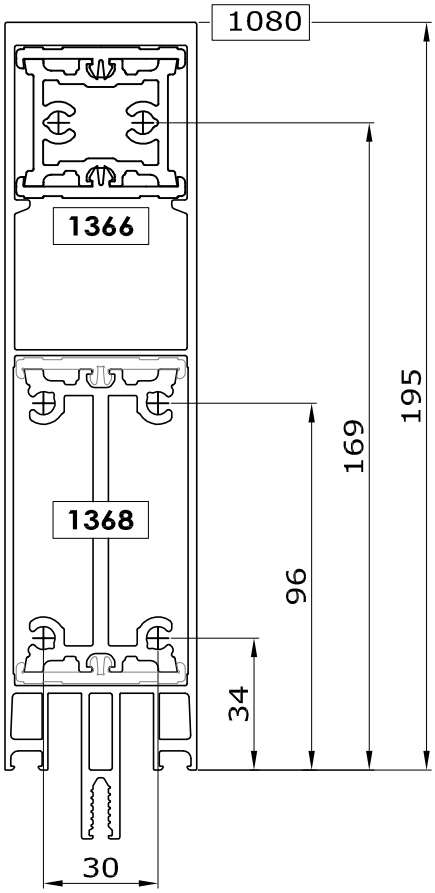

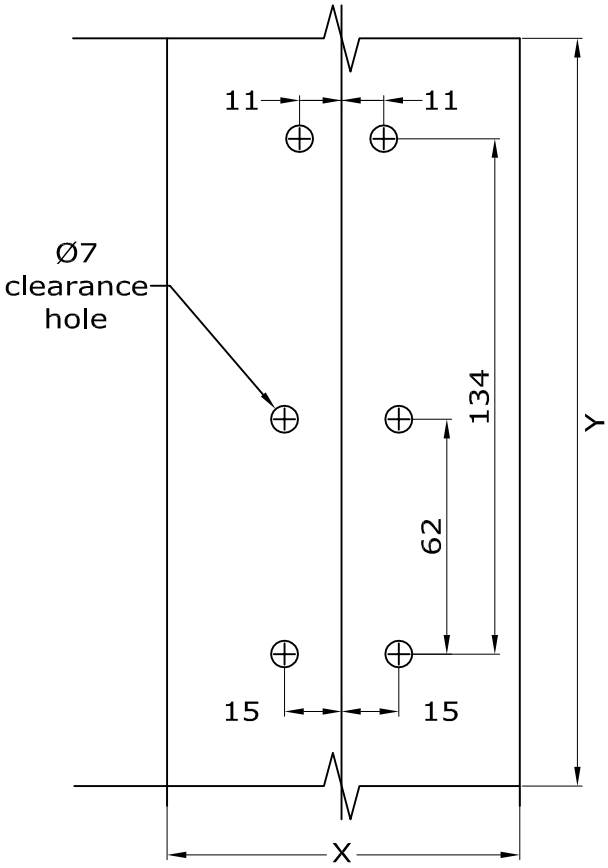

5mm thick aluminium plate supplied by others

Use Ø6.3mm number 14 x 25mm self tapping screw, countersunk (supplied by others) or plate can be welded.

Length & width of plate and anchor bolts to be determined by site conditions and to structural engineers specification.

comar
ARCHITECTURAL ALUMINIUM SYSTEMS

Changes reserved
Sous reserve de modifications
Änderungen vorbehalten

Issue: 04
Date : 08-15

Mullion sleeve plate 210 mm (1082)

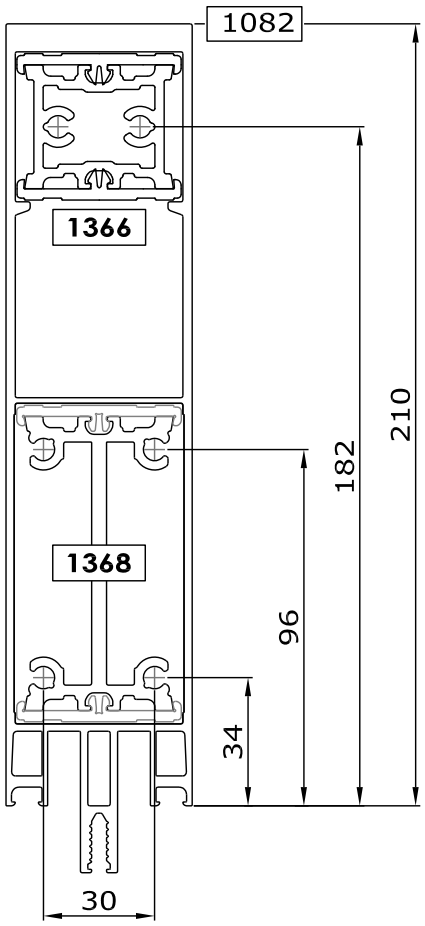

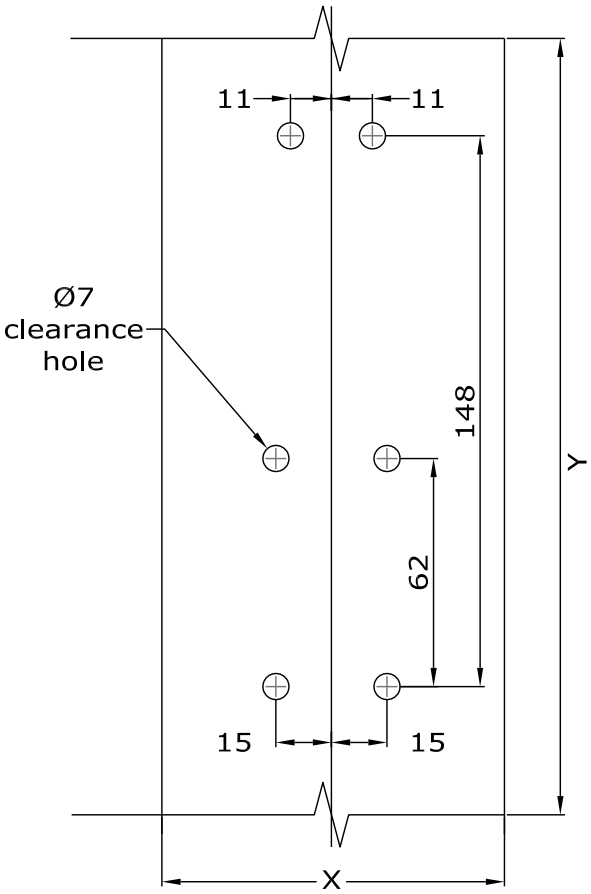

7.09

Fabricators Guide

5mm thick aluminium plate supplied by others

Use Ø6.3mm number 14 x 25mm self tapping screw, countersunk (supplied by others) or plate can be welded.

Length & width of plate and anchor bolts to be determined by site conditions and to structural engineers specification.

Changes reserved
Sous reserve de modifications
Änderungen vorbehalten

Issue: 04
Date :08-15

comar
ARCHITECTURAL ALUMINIUM SYSTEMS

Future Additions

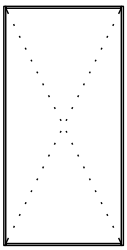

7.10

Fabricators Guide

FUTURE ADDITION

comar
ARCHITECTURAL ALUMINIUM SYSTEMS

Changes reserved
Sous reserve de modifications
Änderungen vorbehalten

Issue: 04
Date : 01-14

Installation methods

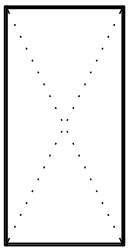

Installation Method: 1

Mullions followed by transoms.

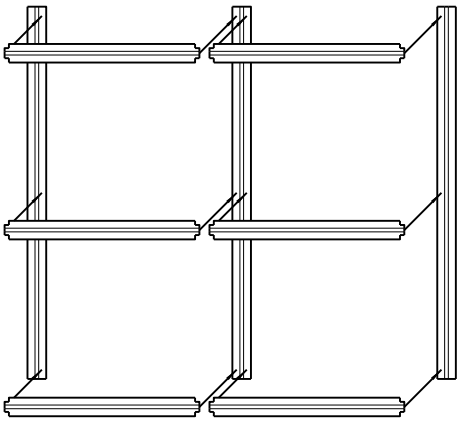

Installation Method: 2

Elements (ladders) followed by intermediate transoms.

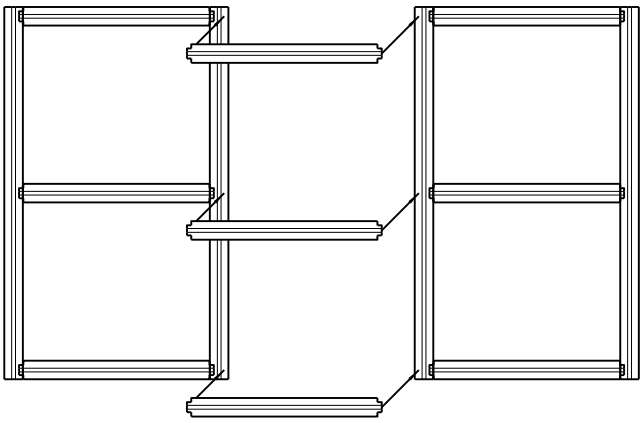

Installation 7

Comar 6EFT

Single gasket installation

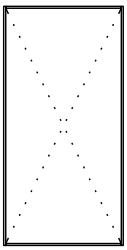

7.12

Fabricators Guide

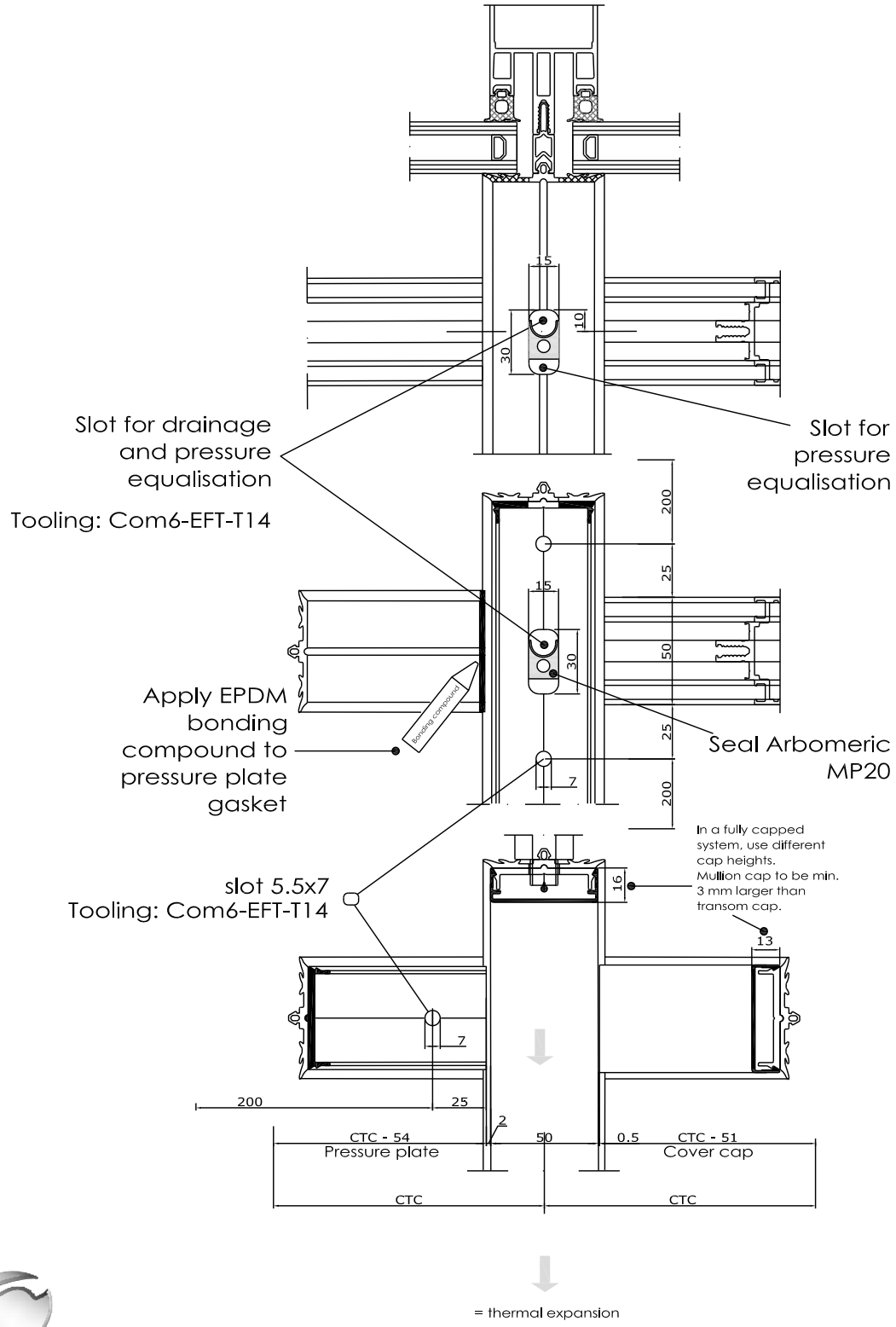

comar
ARCHITECTURAL ALUMINIUM SYSTEMS

Changes reserved
Sous reserve de modifications
Änderungen vorbehalten

Issue: 04
Date : 01-14

Future Additions

7.13

FUTURE ADDITION

Fabricators Guide

Changes reserved
Sous reserve de modifications
Änderungen vorbehalten

Issue: 04
Date :01-14

comar
ARCHITECTURAL ALUMINIUM SYSTEMS

Installation 7

Comar 6EFT

Draining horizontal pressure plate & fixing cover caps

7.14

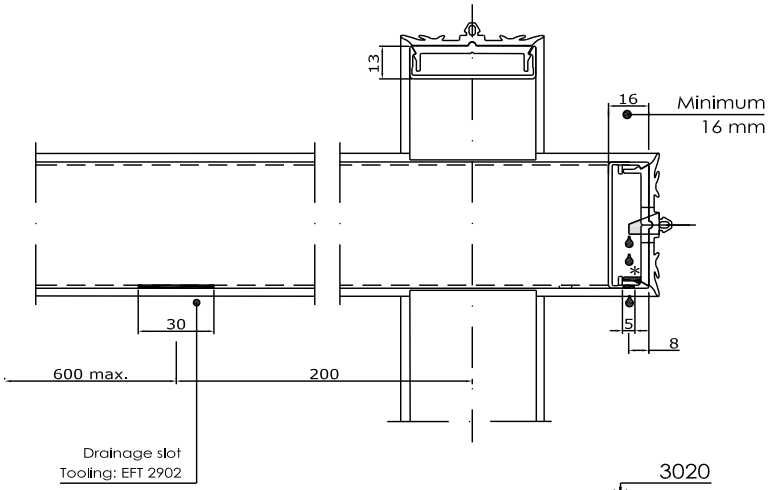

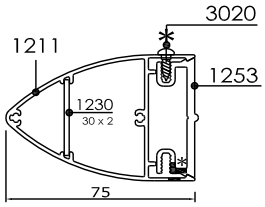

*Secure large sized cover caps with pan head screw 3020 (3.5x9) eg. underneath the vertical cover cap. C.T.C 1500mm maximum.

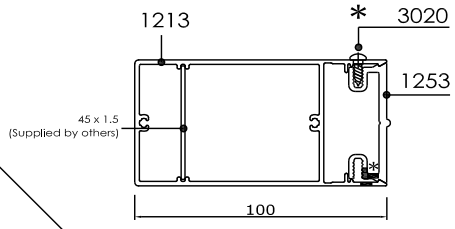

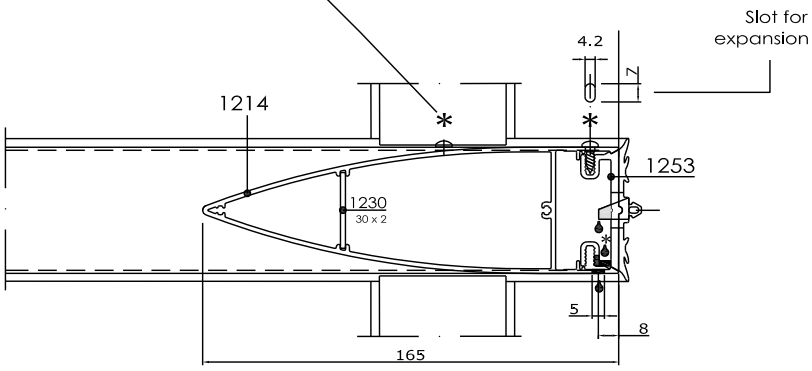

Fabricators Guide

comar
ARCHITECTURAL ALUMINIUM SYSTEMS

Changes reserved
Sous reserve de modifications
Änderungen vorbehalten

Issue: 04
Date : 01-14

Draining large heights
Fixing vertical cover caps

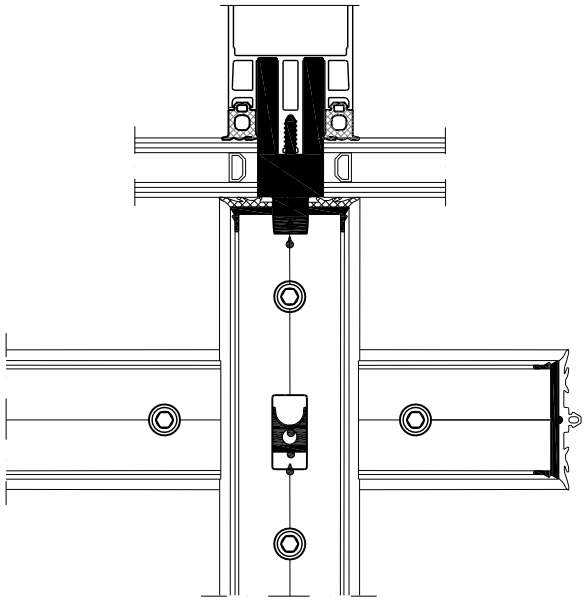

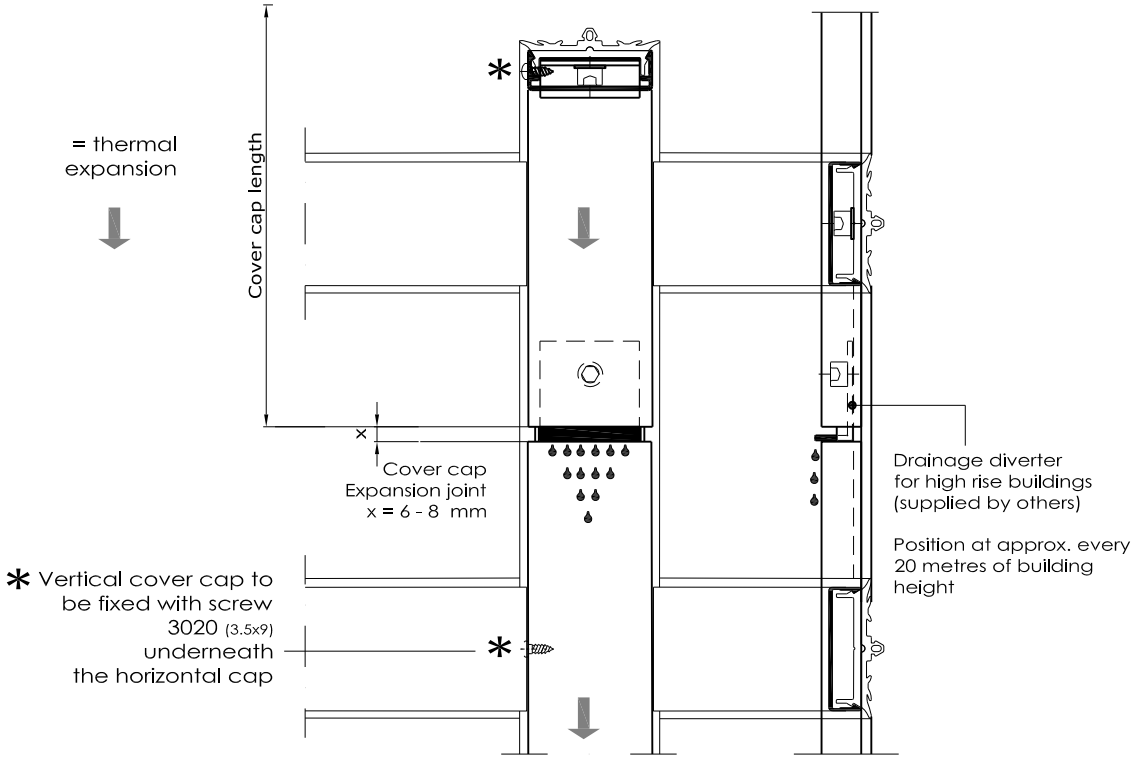

Changes reserved
Sous reserve de modifications
Änderungen vorbehalten

Issue: 04
Date :01-14

comar
ARCHITECTURAL ALUMINIUM SYSTEMS

Comar 6EFT

Location of glass setting blocks & temporary glazing aids

7.16

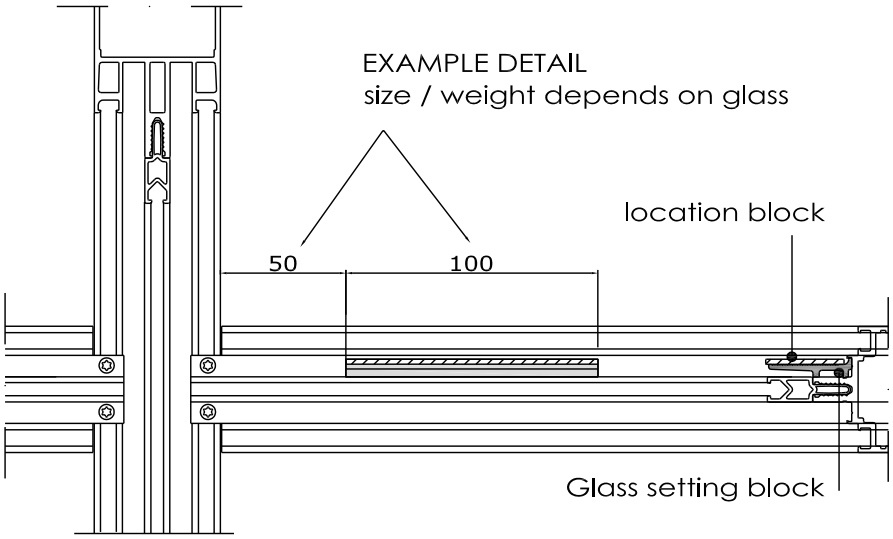

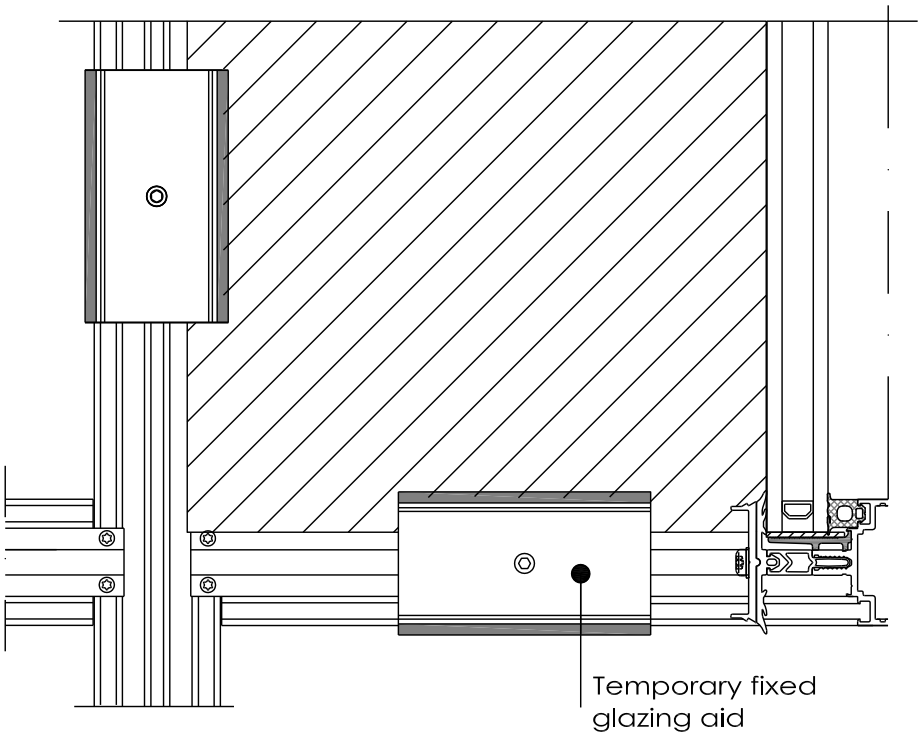

comar
ARCHITECTURAL ALUMINIUM SYSTEMS

Changes reserved
Sous reserve de modifications
Änderungen vorbehalten

Issue: 04
Date : 01-14

Fixing bracket hole preparation

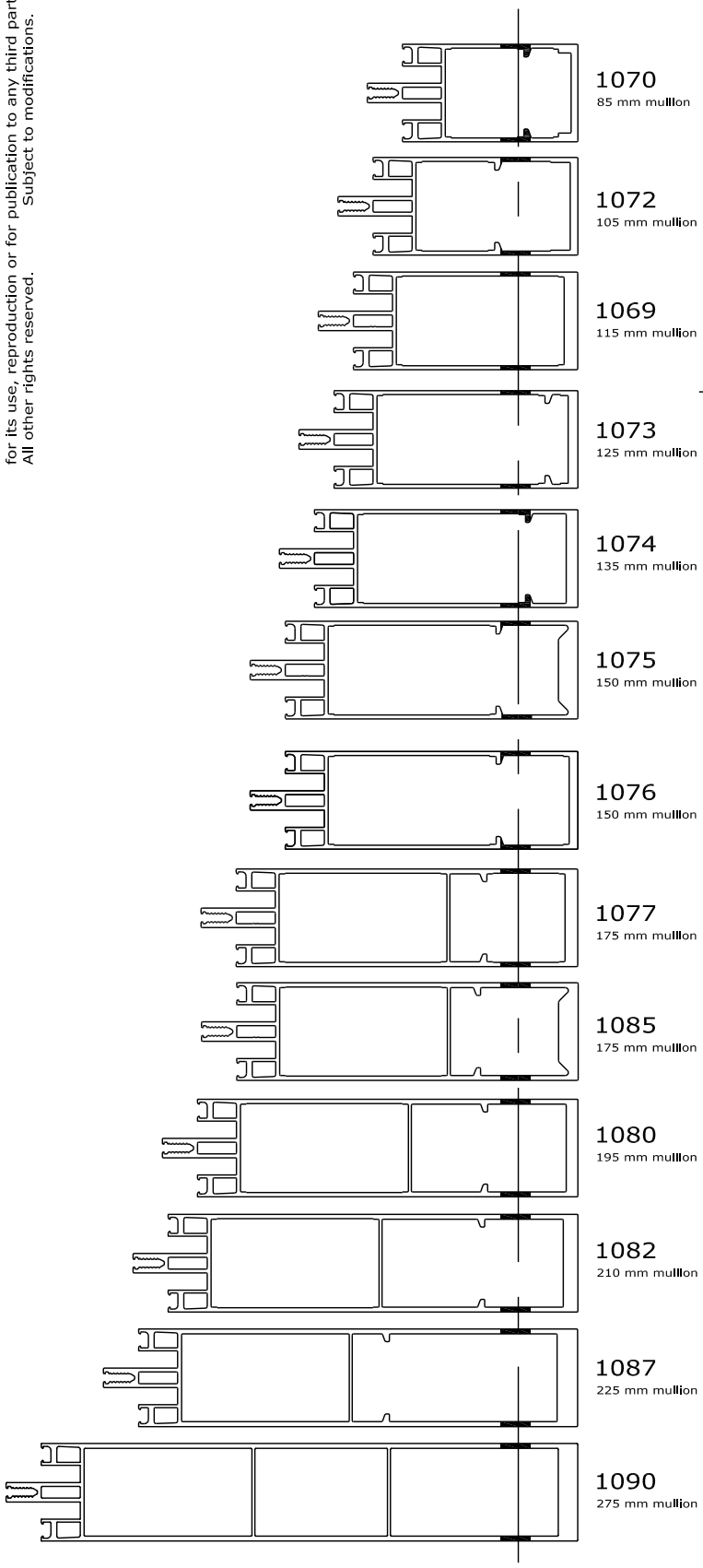

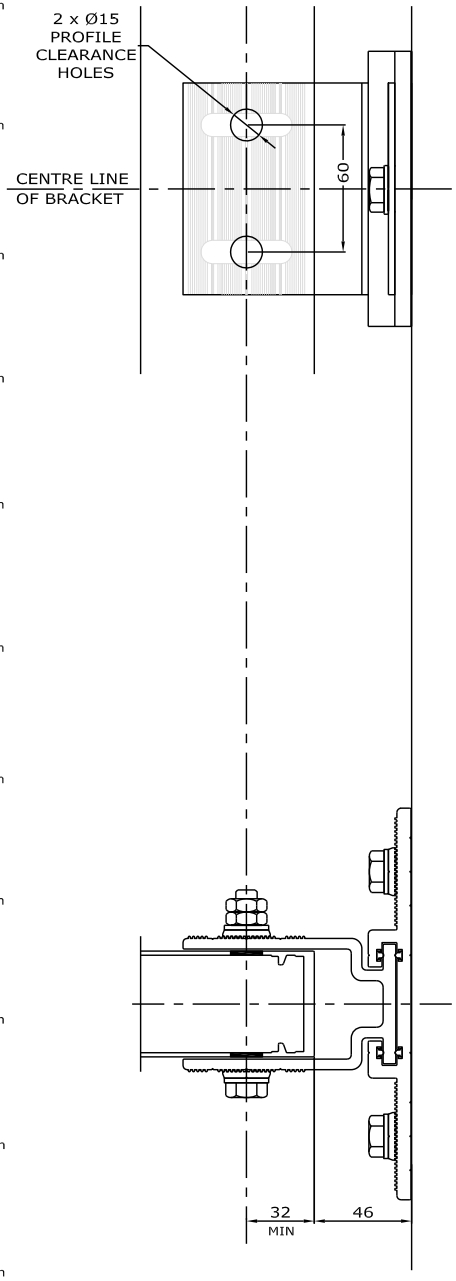

7.17

Fabricators Guide

Changes reserved
Sous reserve de modifications
Änderungen vorbehalten

Issue: 04
Date : 08-15

comar
ARCHITECTURAL ALUMINIUM SYSTEMS

Installation 7

Comar 6EFT

Fixing bracket instructions Page 1

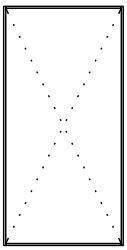

7.18

1 Back Plate
2 Guide Strip
3 Sleeve Channel
4 Bearing Tube
5 Locking Plate
6 Anchor bolts & nuts

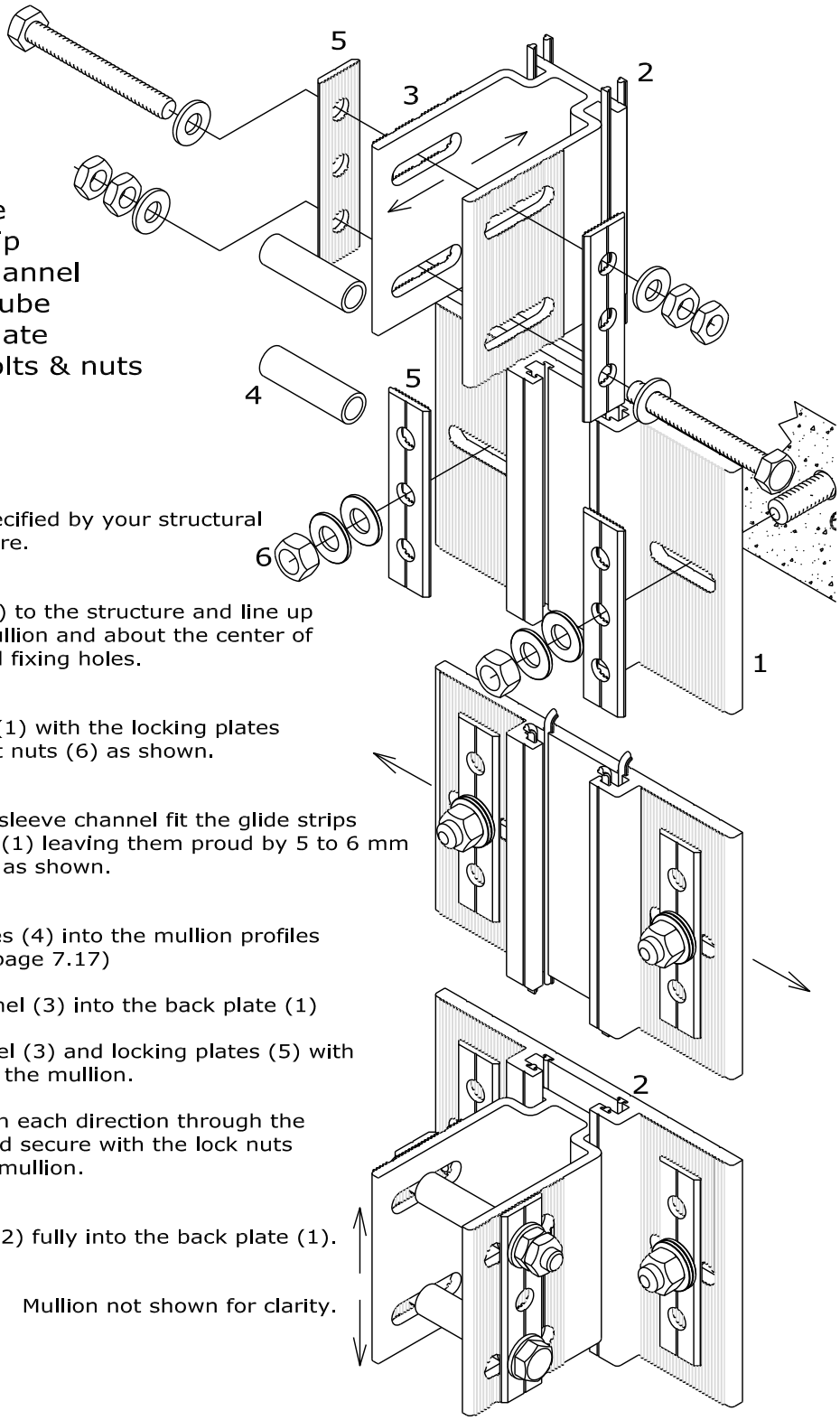

Fabricators Guide

Fit anchor bolts (6) specified by your structural engineer to the structure.

Offer the back plate (1) to the structure and line up to the center of the mullion and about the center of the mullions pre-drilled fixing holes.

Secure the back plate (1) with the locking plates (5) and the anchor bolt nuts (6) as shown.

To aid insertion of the sleeve channel fit the glide strips (2) into the back plate (1) leaving them proud by 5 to 6 mm and open out the ends as shown.

Insert the bearing tubes (4) into the mullion profiles pre-drilled holes (See page 7.17)

Insert the sleeve channel (3) into the back plate (1)

Align the sleeve channel (3) and locking plates (5) with the pre-drilled holes in the mullion.

Insert the fixings one in each direction through the mullion and bracket and secure with the lock nuts upon alignment of the mullion.

Insert the glide strips (2) fully into the back plate (1).

Mullion not shown for clarity.

comar
ARCHITECTURAL ALUMINIUM SYSTEMS

Changes reserved
Sous reserve de modifications
Änderungen vorbehalten

Issue: 04
Date : 01-14

Fixing bracket instructions Page 2

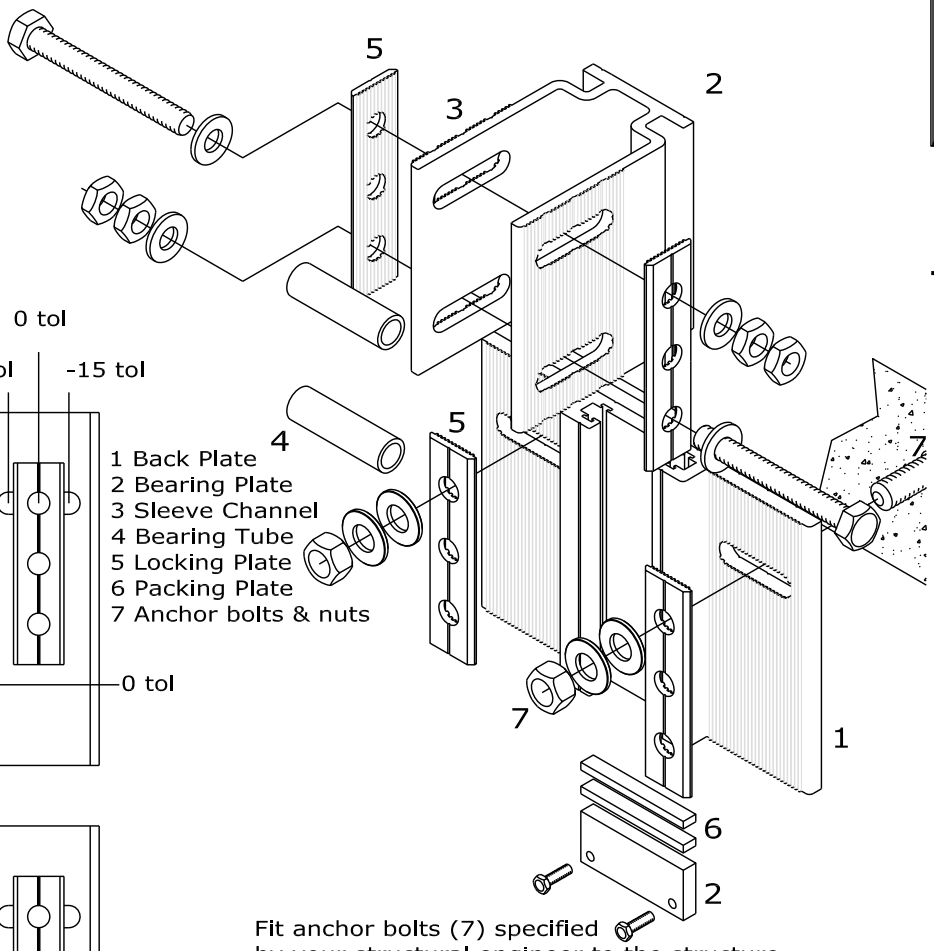

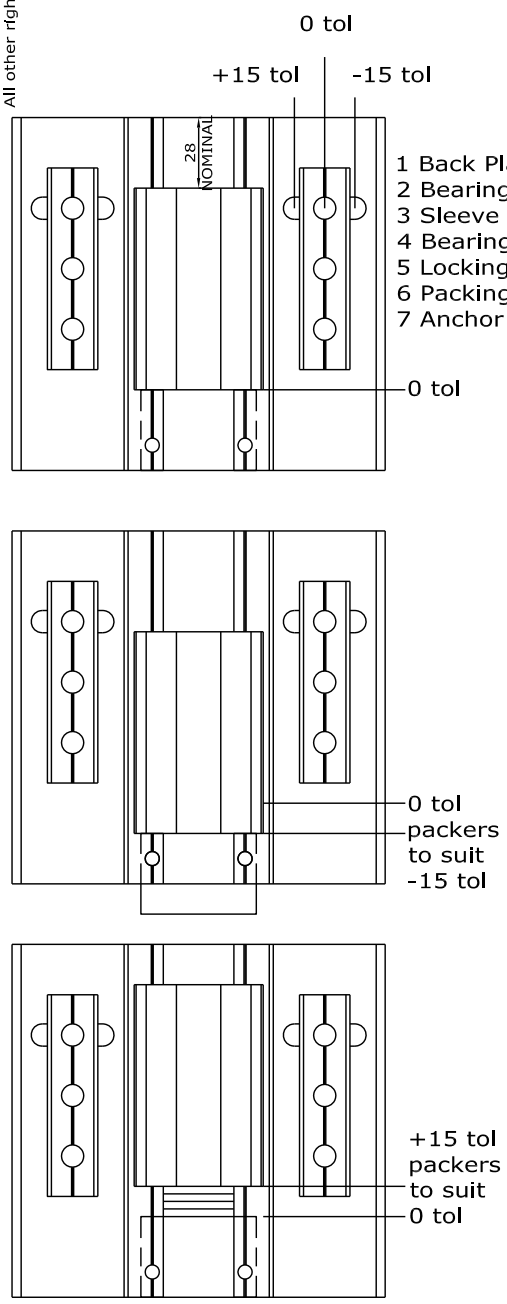

1 Back Plate
2 Bearing Plate
3 Sleeve Channel
4 Bearing Tube
5 Locking Plate
6 Packing Plate
7 Anchor bolts & nuts

Fit anchor bolts (7) specified by your structural engineer to the structure.

Offer the back plate (1) to the structure and line up to the center of the mullion and about the center of the mullions pre-drilled fixing holes.

Secure the back plate (1) with the locking plates (5) and the anchor bolt nuts (7) as shown.

Apply aluminium glue (SE007) to sleeve channel and insert into the back plate (1).

Insert the bearing tubes (4) into the mullion profiles pre-drilled holes (See page 7.17)

Align the sleeve channel (3) and locking plates (5) with the pre-drilled holes in the mullion.

Insert the fixings one in each direction through the mullion and bracket and secure with the lock nuts upon alignment of the mullion.

Plumb level the mullions, insert the packing (6) and bearing plate (2) and secure tightly using No2 M6 screws.

Changes reserved
Sous reserve de modifications
Änderungen vorbehalten

Issue: 04
Date : 01-14

comar
ARCHITECTURAL ALUMINIUM SYSTEMS

Installation 7

Comar 6EFT

Wall fixing bracket (jamb) 9671 Page 1

7.20

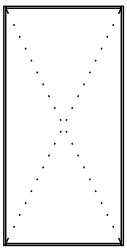

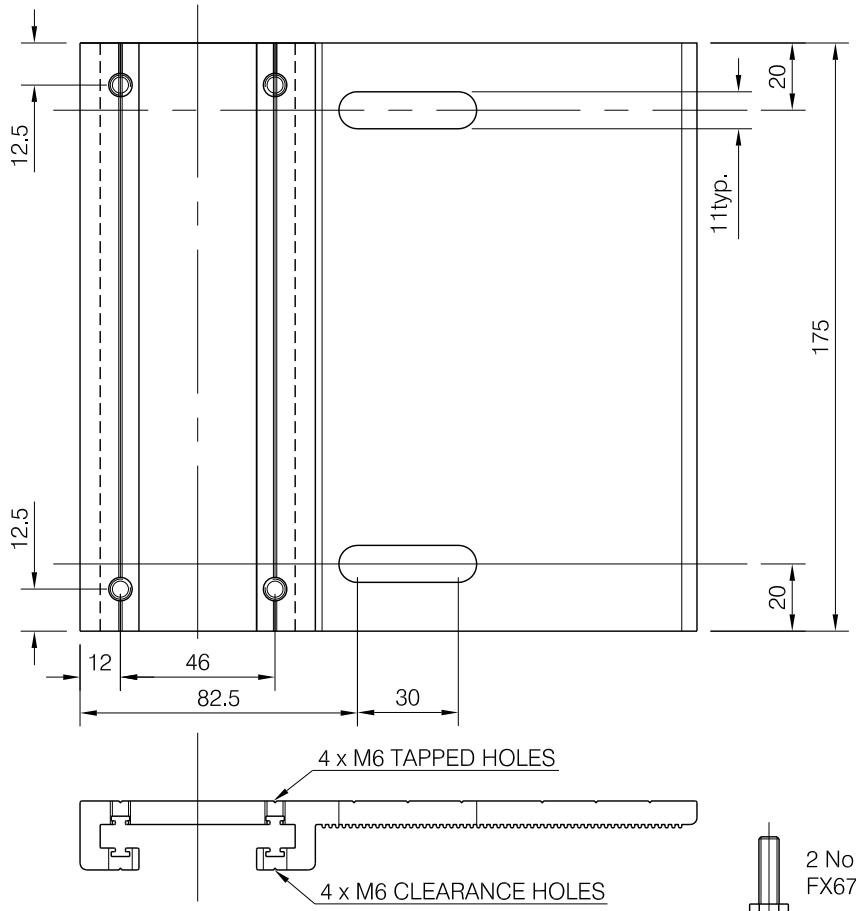

(CUT FROM CS904)

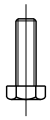

2 No. M6x20mm SCREWS
FX676XSLF

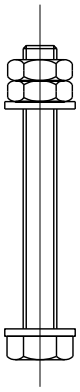

4 No. M10 Locking Nuts.
FX673XSLF

2 No. M10 x 90mm Hex Head Bolts.
FX672XSLF

4 No. M10 Nylon Washers.
FX674XSLF

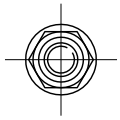

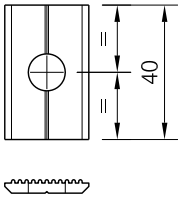

(CUT FROM CS903)

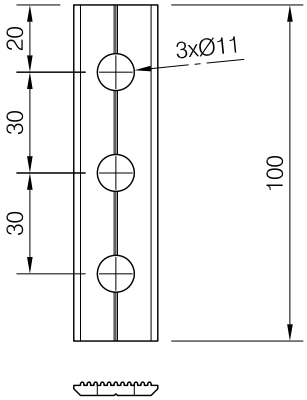

(CUT FROM CS903)

Fabricators Guide

comar
ARCHITECTURAL ALUMINIUM SYSTEMS

Changes reserved
Sous reserve de modifications
Änderungen vorbehalten

Issue: 04
Date : 01-14

Wall fixing bracket instructions (jamb) 9671
Page 2

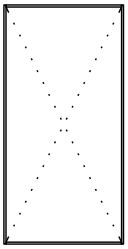

7.21

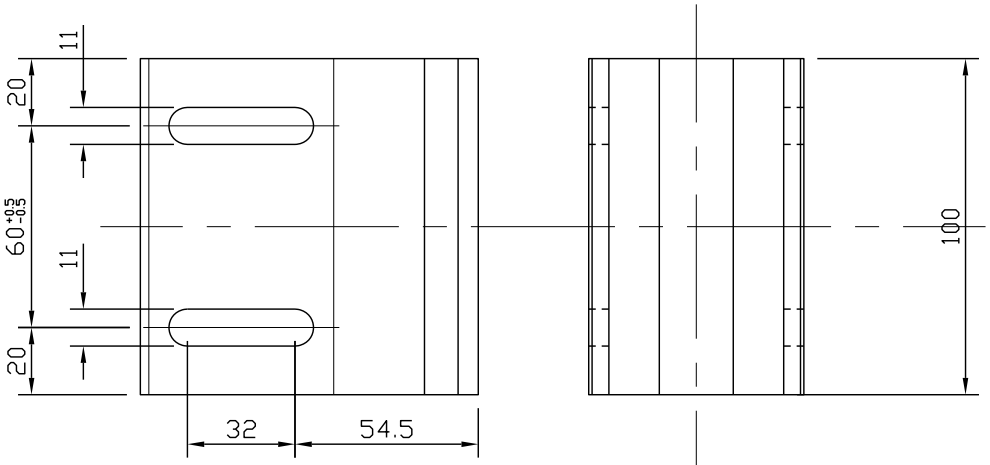

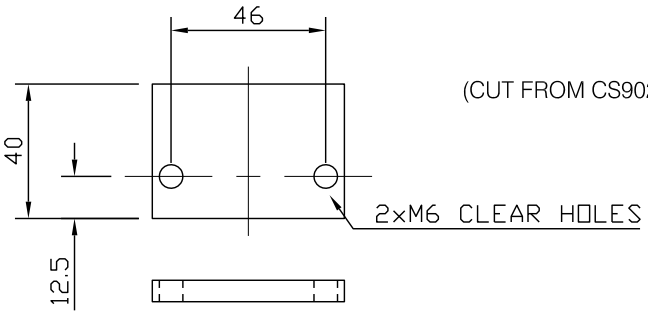

(CUT FROM CS902)

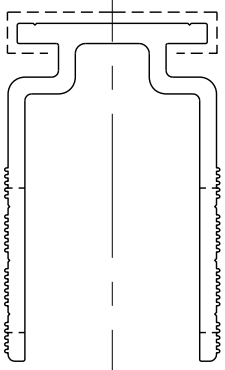

Aluminium glue to be applied before assembly (SE007)
Not supplied in kit.

1 No. 2 1/4" x 1/4" Aluminium Flat
CL006XSLF

2mm packer - CL012XSLF (pack of 10)
3mm packer - CL013XSLF (pack of 10)

Packers are purchased as separate items.

2 No. Aluminium Tubes.
FX675XSLF

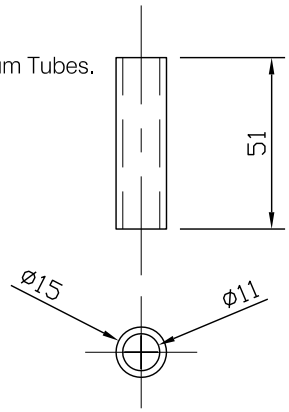

KIT COMPRISES

1 No. CS901 Component
1 No. CS902 Component
4 No. CS903 Components
1 No. Aluminium Flat. CL006XSLF
2 No. Aluminium Tubes. FX675XSLF
4 No. M10 Locking Nuts. FX673XSLF
2 No. M10 x 90mm Hex Head Bolts. FX672XSLF
4 No. M10 Nylon Washers. FX674XSLF
2 No. M6 x 20mm Screws.FX676XSLF

Fabricators Guide

Changes reserved
Sous reserve de modifications
Änderungen vorbehalten

Issue: 04
Date : 01-14

comar
ARCHITECTURAL ALUMINIUM SYSTEMS

Comar 6EFT

Wall fixing bracket (intermediate) 9672 Page 1

7.22

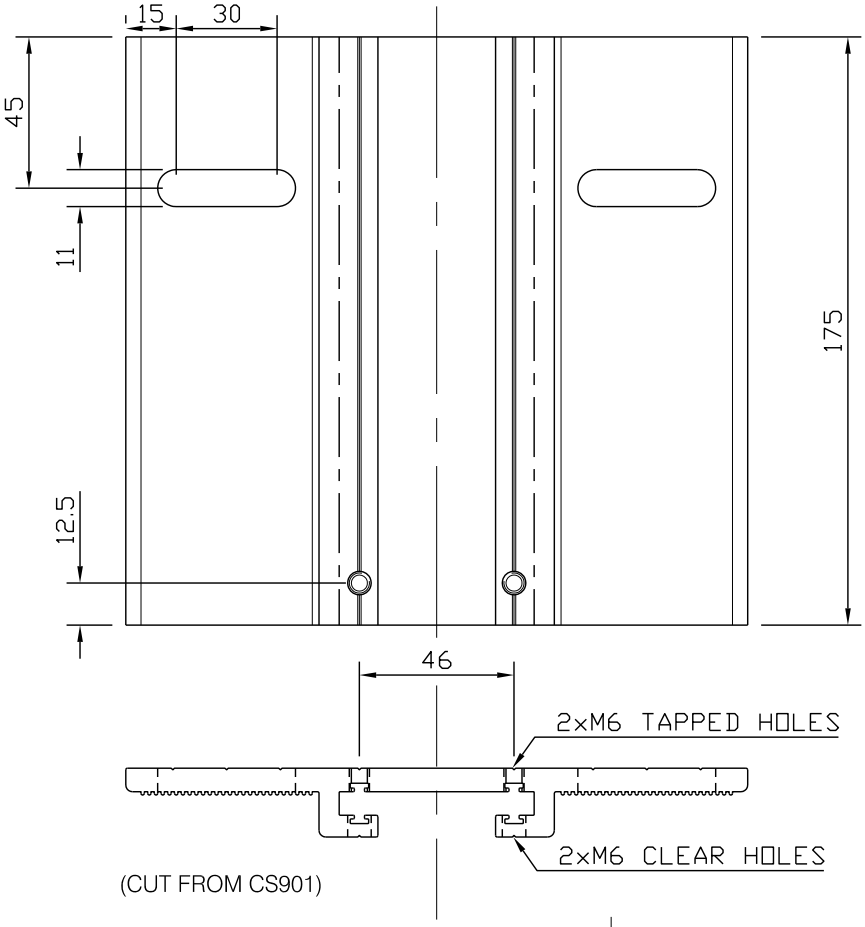

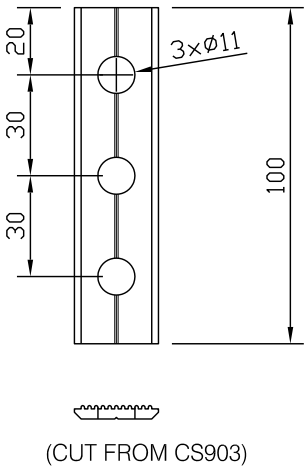

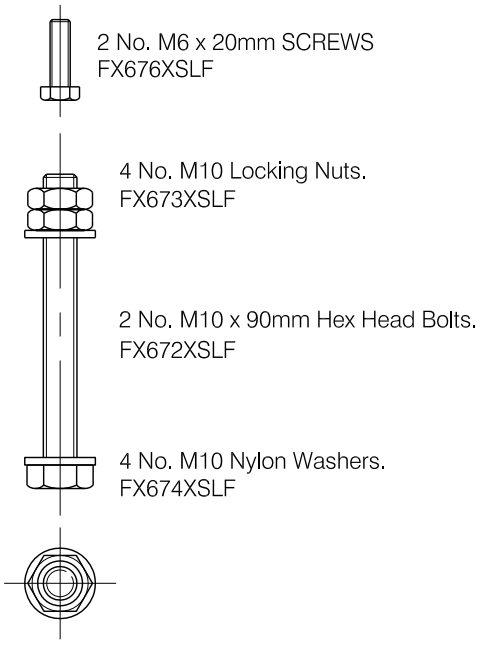

Fabricators Guide

comar
ARCHITECTURAL ALUMINIUM SYSTEMS

Changes reserved
Sous reserve de modifications
Änderungen vorbehalten

Issue: 04
Date : 01-14

Wall fixing bracket instructions (intermediate) 9672 Page 2

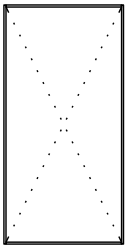

7.23

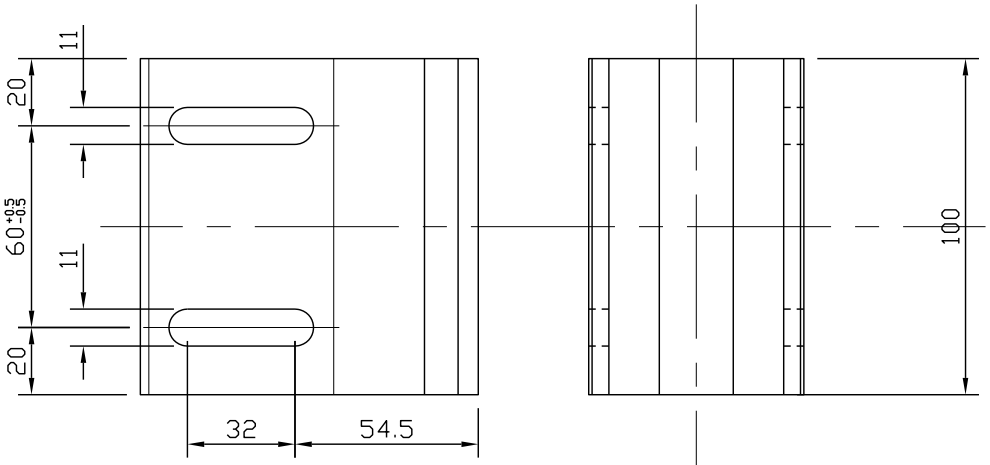

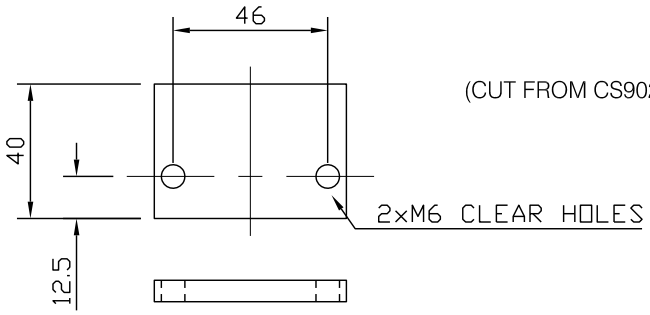

(CUT FROM CS902)

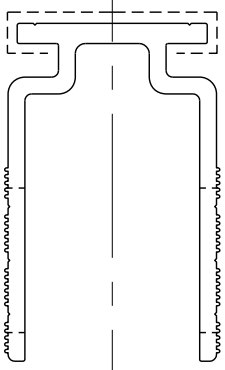

Aluminium glue to be applied before assembly (SE007)
Not supplied in kit.

1 No. 2 1/4" x 1/4" Aluminium Flat
CL006XSLF

2mm packer - CL012XSLF (pack of 10)
3mm packer - CL013XSLF (pack of 10)

Packers are purchased as separate items.

2 No. Aluminium Tubes.
FX675XSLF

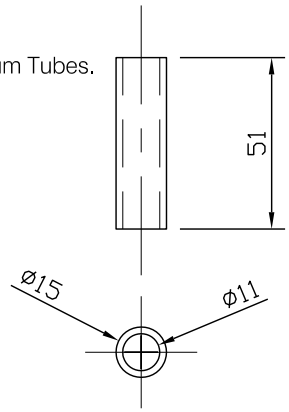

KIT COMPRISES

1 No. CS901 Component
1 No. CS902 Component
4 No. CS903 Components
1 No. Aluminium Flat. CL006XSLF
2 No. Aluminium Tubes. FX675XSLF
4 No. M10 Locking Nuts. FX673XSLF
2 No. M10 x 90mm Hex Head Bolts. FX672XSLF
4 No. M10 Nylon Washers. FX674XSLF
2 No. M6 x 20mm Screws.FX676XSLF

Changes reserved
Sous reserve de modifications
Änderungen vorbehalten

Issue: 04
Date : 01-14

comar
ARCHITECTURAL ALUMINIUM SYSTEMS

Comar 6EFT

Wall sliding bracket (jamb) 9673 Page 1

7.24

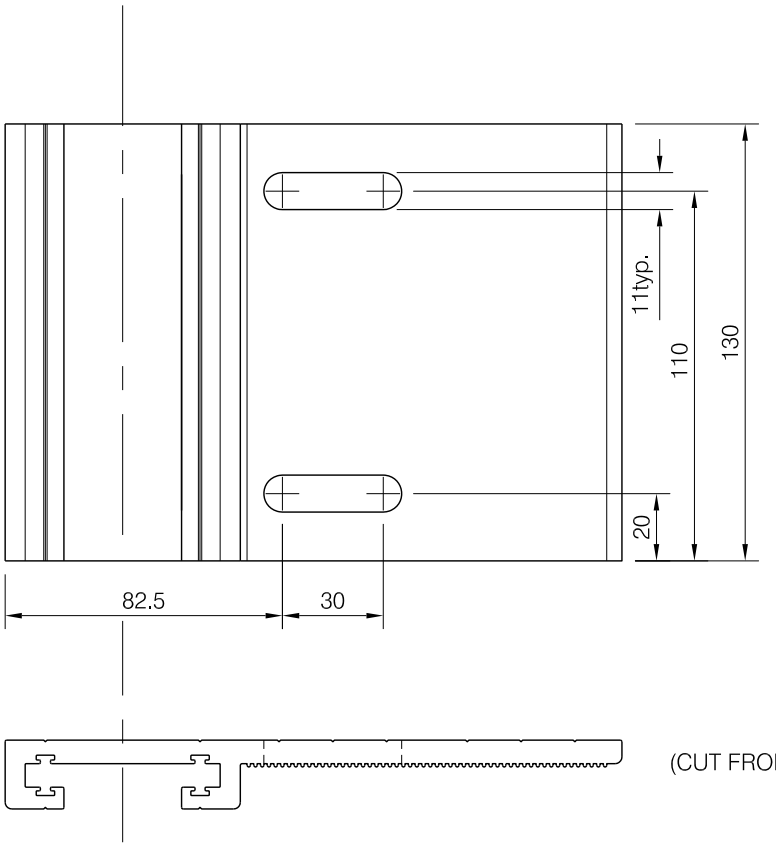

(CUT FROM CS904)

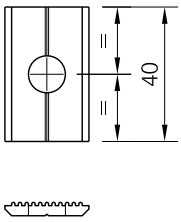

(CUT FROM CS903)

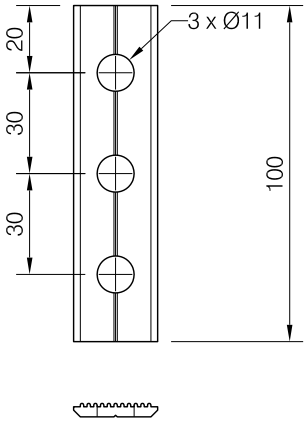

(CUT FROM CS903)

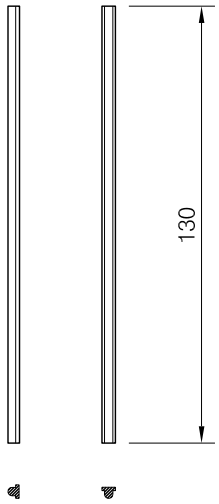

4 No. Req'd cut from GK055.
These items are not supplied in the kit.

Fabricators Guide

comar
ARCHITECTURAL ALUMINIUM SYSTEMS

Changes reserved
Sous reserve de modifications
Änderungen vorbehalten

Issue: 04
Date : 01-14

Wall fixing bracket (jamb) 9673
Page 2

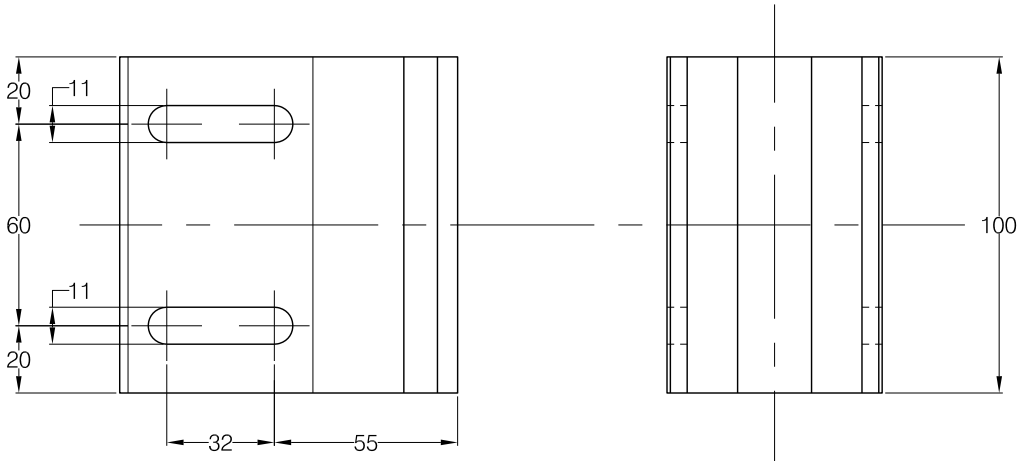

7.25

(CUT FROM CS902)

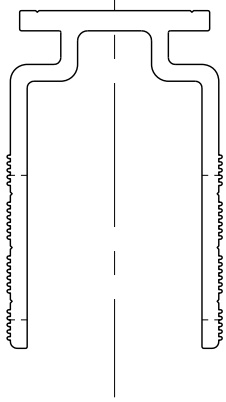

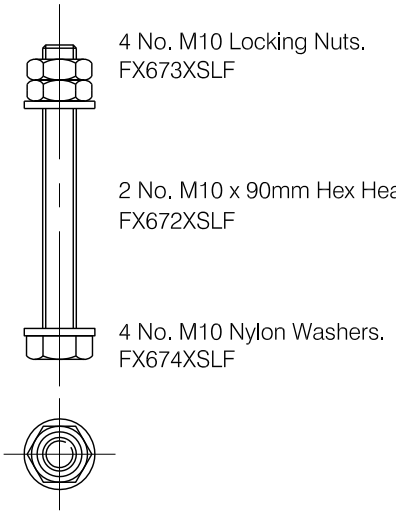

4 No. M10 Locking Nuts.
FX673XSLF

2 No. M10 x 90mm Hex Head Bolts.
FX672XSLF

4 No. M10 Nylon Washers.
FX674XSLF

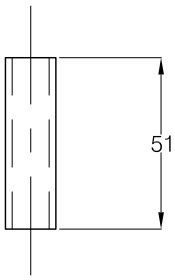

2 No. Aluminium Tubes.
FX675XSLF

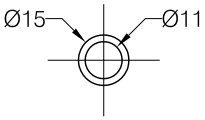

KIT COMPRISES

1 No. CS901 Component
1 No. CS902 Component
4 No. CS903 Components
2 No. Aluminium Tubes. FX675XSLF
4 No. M10 Locking Nuts. FX673XSLF
2 No. M10 x 90mm Hex Head Bolts. FX672XSLF
4 No. M10 Nylon Washers. FX674XSLF

Fabricators Guide

Changes reserved
Sous reserve de modifications
Änderungen vorbehalten

Issue: 04
Date : 01-14

comar
ARCHITECTURAL ALUMINIUM SYSTEMS

Wall sliding bracket (intermediate) 9674 Page 1

7.26

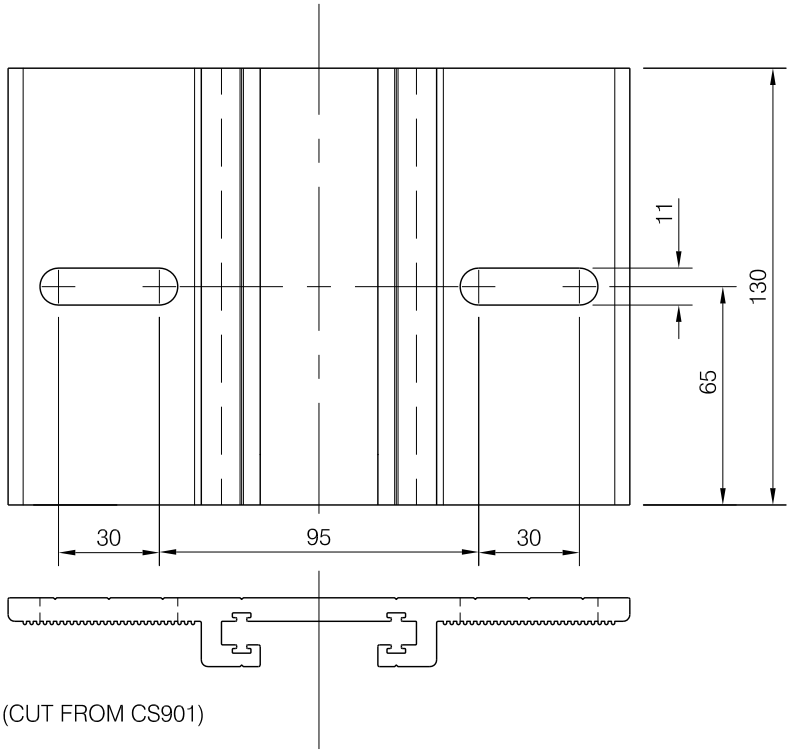

(CUT FROM CS901)

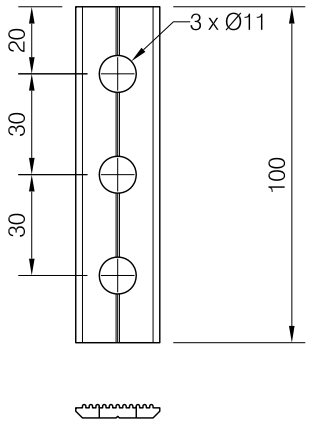

(CUT FROM CS903)

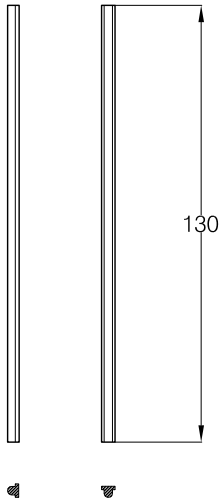

4 No. Req'd cut from GK055.
These items are not supplied in the kit.

Wall fixing bracket (intermediate) 9674
Page 2

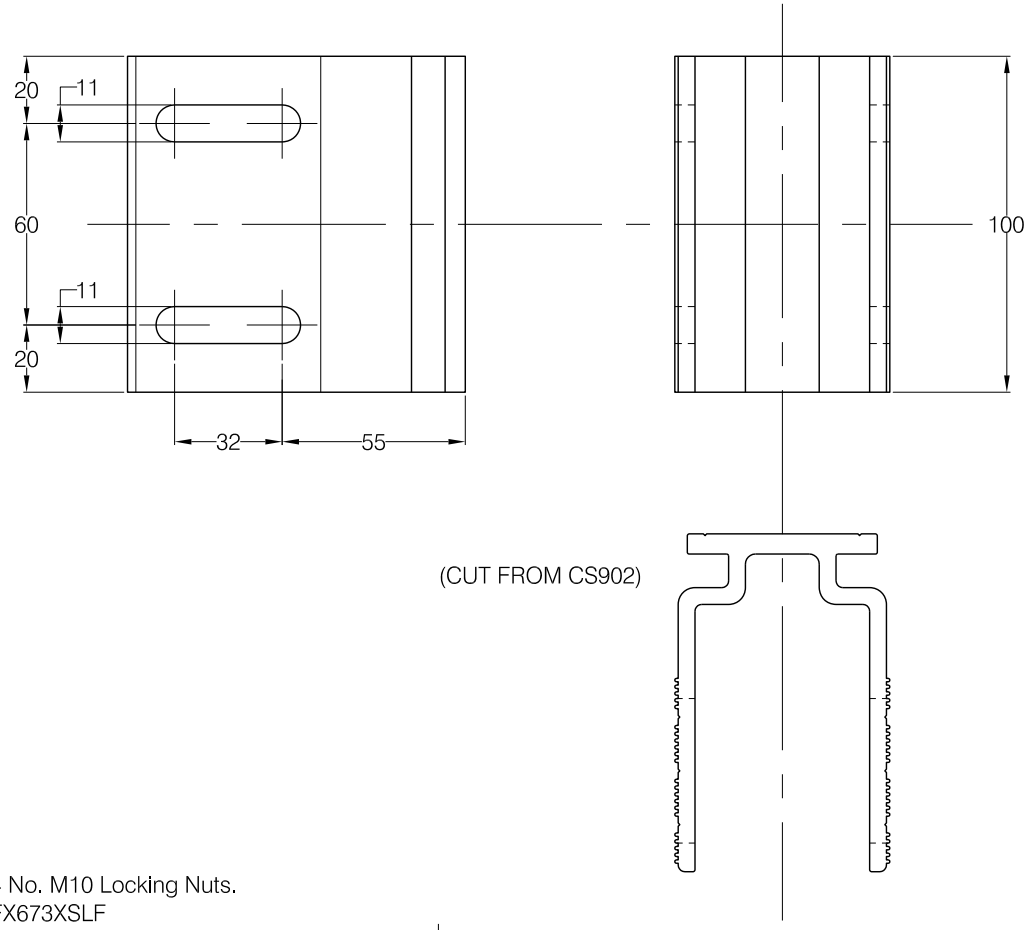

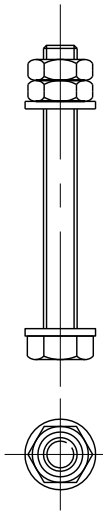

4 No. M10 Locking Nuts.
FX673XSLF

2 No. M10 x 90mm Hex Head Bolts.
FX672XSLF

4 No. M10 Nylon Washers.
FX674XSLF

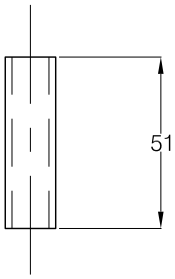

2 No. Aluminium Tubes.
FX675XSLF

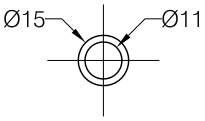

KIT COMPRISES

1 No. CS901 Component
1 No. CS902 Component
4 No. CS903 Components
2 No. Aluminium Tubes. FX675XSLF
4 No. M10 Locking Nuts. FX673XSLF
2 No. M10 x 90mm Hex Head Bolts. FX672XSLF
4 No. M10 Nylon Washers. FX674XSLF

Changes reserved
Sous reserve de modifications
Änderungen vorbehalten

Issue: 04
Date : 01-14

comar
ARCHITECTURAL ALUMINIUM SYSTEMS

Installation 7

Comar 6EFT

Direct fix to steel
Fixing lug spacing

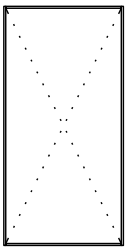

7.28

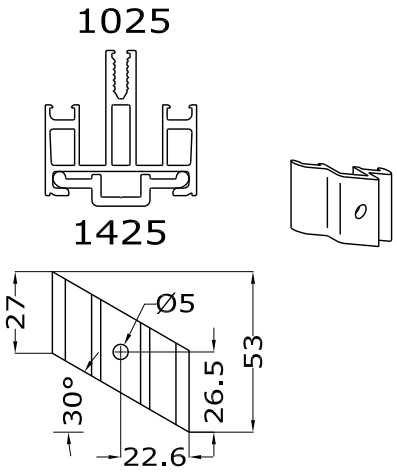

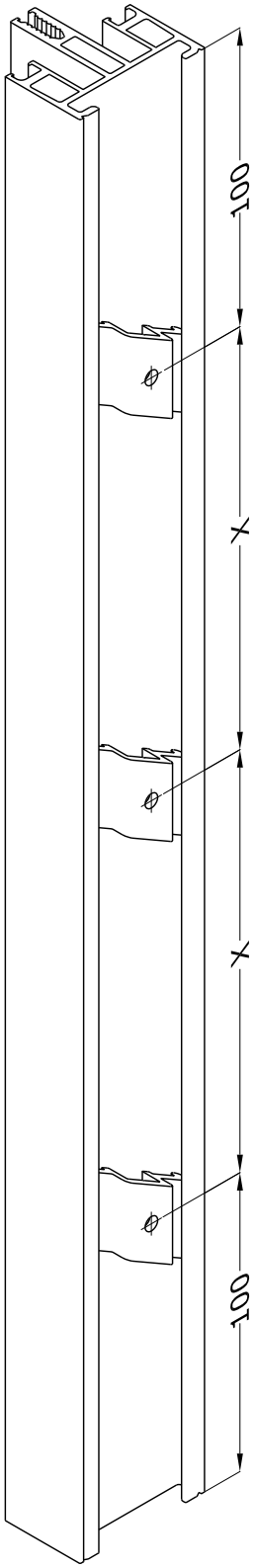

Centre of fixing lug to be positioned 100mm from the end of each mullion and transom.

Fixing lug spacing then depends on height of curtain walling.

Areas of curtain walling	
≤15m in height	>15m in hieght
Fixing lugs at 600mm centres max.	Fixing lugs at 400mm centres max.

Fabricators Guide

comar
ARCHITECTURAL ALUMINIUM SYSTEMS

Changes reserved
Sous reserve de modifications
Änderungen vorbehalten

Issue: 04
Date : 01-14

Direct fix to steel
Fixing lugs

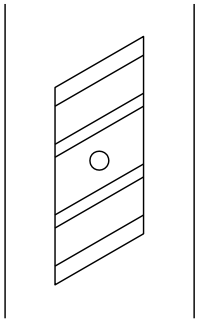

1. Aluminium to steel seperator, fixing lug and 1mm spring washer to be fixed to steel using suitable fixing as approved by structural engineer at spacing as stated on page 7.28.

2. Mullion/transom profile to be placed over toggles.

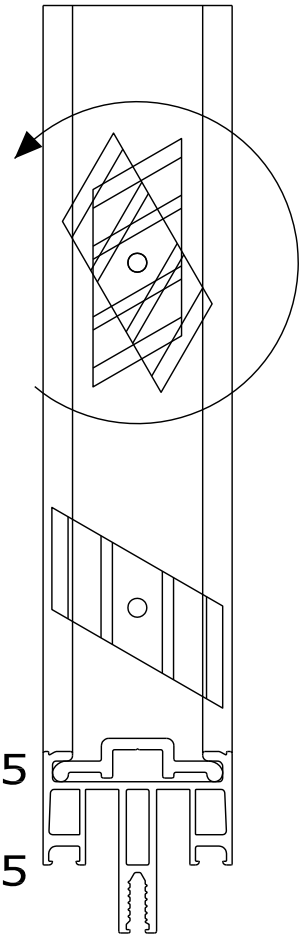

3. Toggle to be twisted through 90°

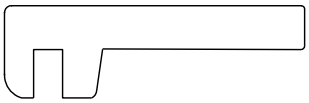

Example of Lug Tool
(not supplied by COMAR)
This tool to be made to suit by Fabricator

4. Toggle in final position

comar
ARCHITECTURAL ALUMINIUM SYSTEMS

Installation 7

Comar 6EFT

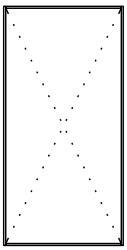

7.30

Fabricators Guide

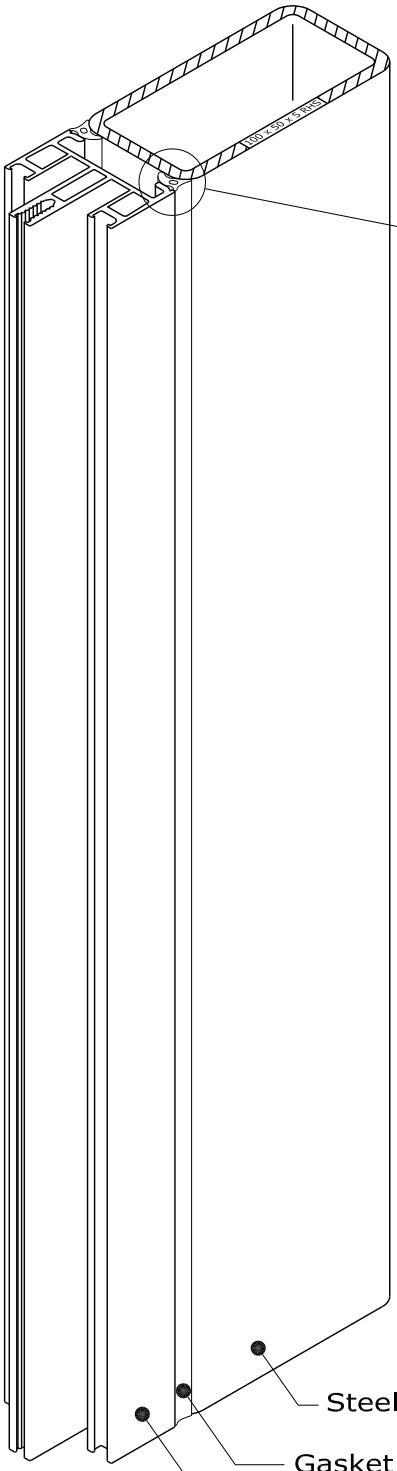

Direct fix to steel
Internal sealing

The internal seal between the aluminium profile and the steel can be a gasket or silicone sealant.

Gasket seal

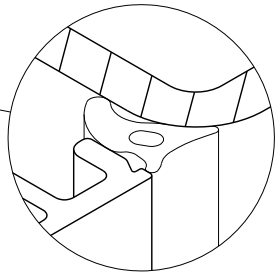

or

Silicone seal

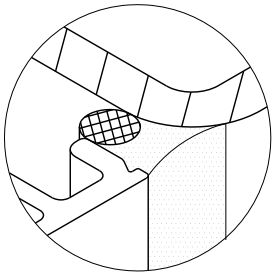

Gasket seal

Aluminium to steel isolator thickness will affect which gasket should be used.

Isolator thickness	Gasket to use	Wedge size
1mm	GK405	4mm
2mm	GK407	5mm
3mm	GK408	6mm

Gasket joints to be bonded using EPDM bonding compound.

Silicone seal

Fit the backing rods as shown. (supplied by others)
Apply the silicone sealant as shown.

comar
ARCHITECTURAL ALUMINIUM SYSTEMS

Changes reserved
Sous reserve de modifications
Änderungen vorbehalten

Issue: 04
Date : 01-14

Butyl tape application

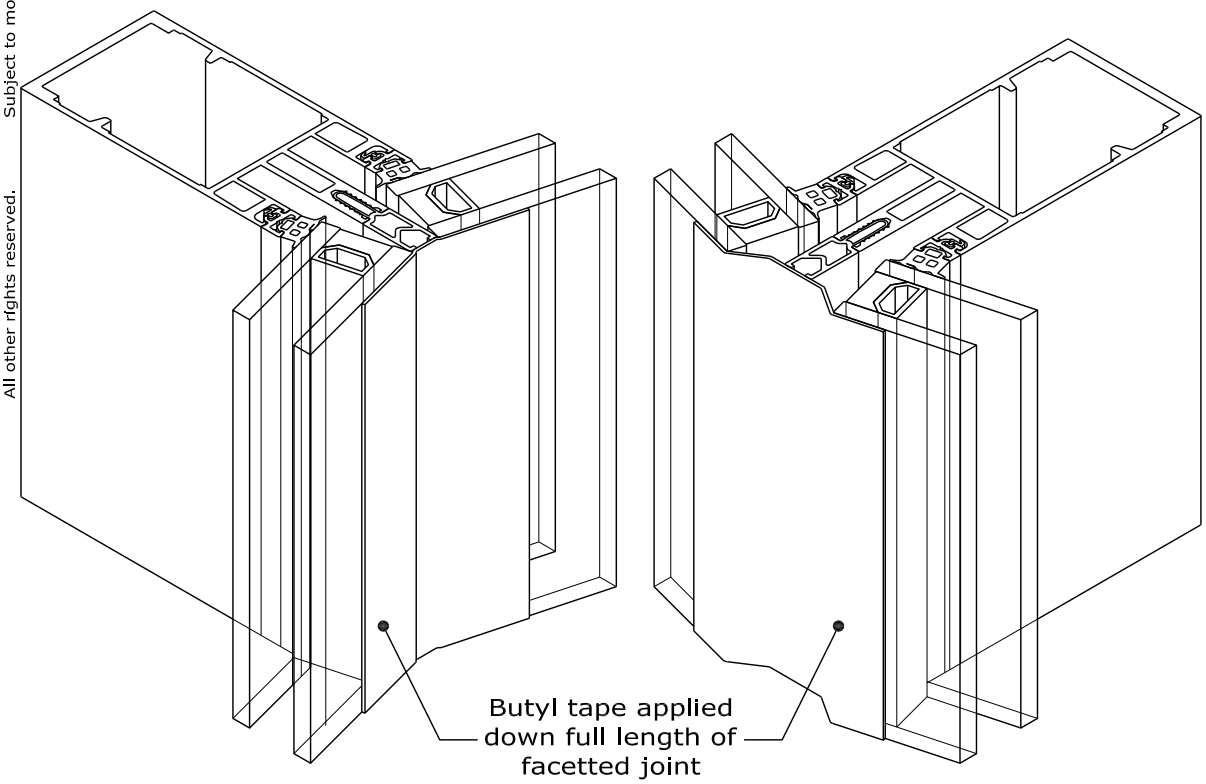

7.31

Butyl tape (supplied by others) to be installed full height of the mullion down any facetted angle joint to be covered by a pressure plate & cover cap.

Punched & drilled holes for pressure plate screws, drainage diverters and pressure equalisation to be cut out of tape ie no hole should be covered.

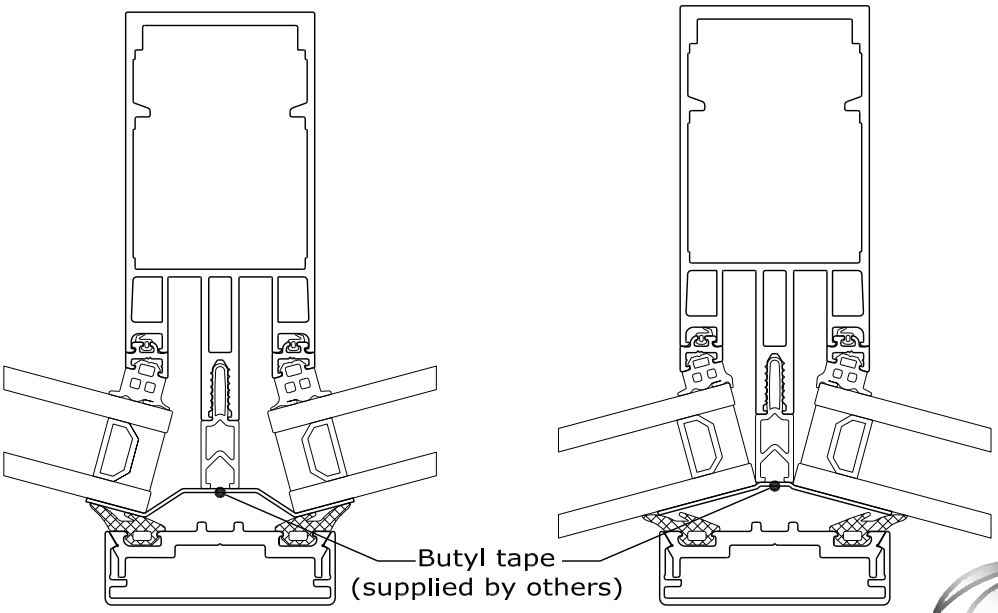

Changes reserved
Sous reserve de modifications
Änderungen vorbehalten

Issue: 04
Date : 01-14

comar
ARCHITECTURAL ALUMINIUM SYSTEMS

Comar 6EFT

Silicone seal & bond breaker tape application

7.32

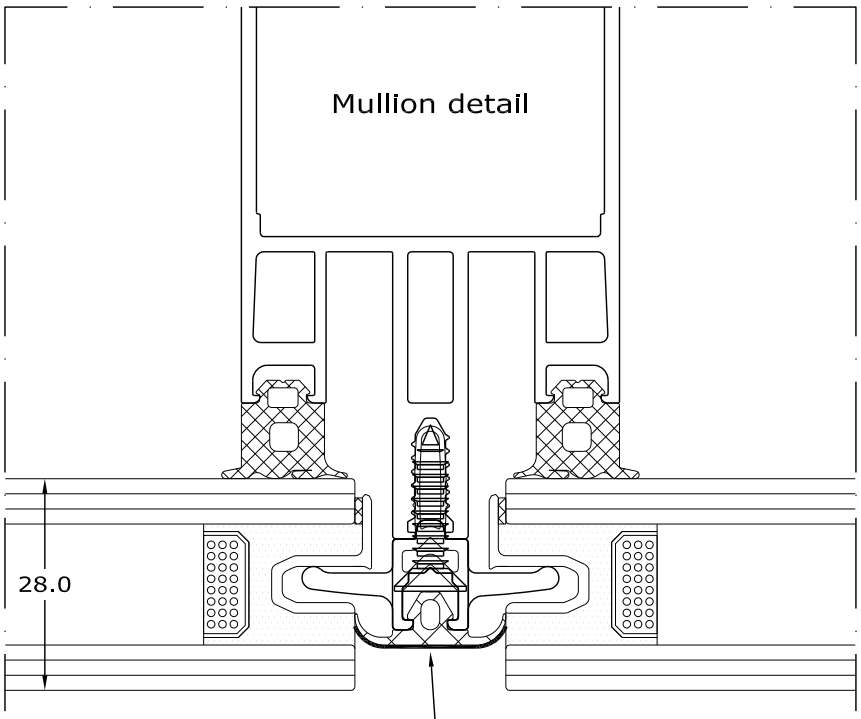

Any edge of gasket that will be exposed to external silicone seal must have bond breaker tape applied to its surface to prevent a three way seal

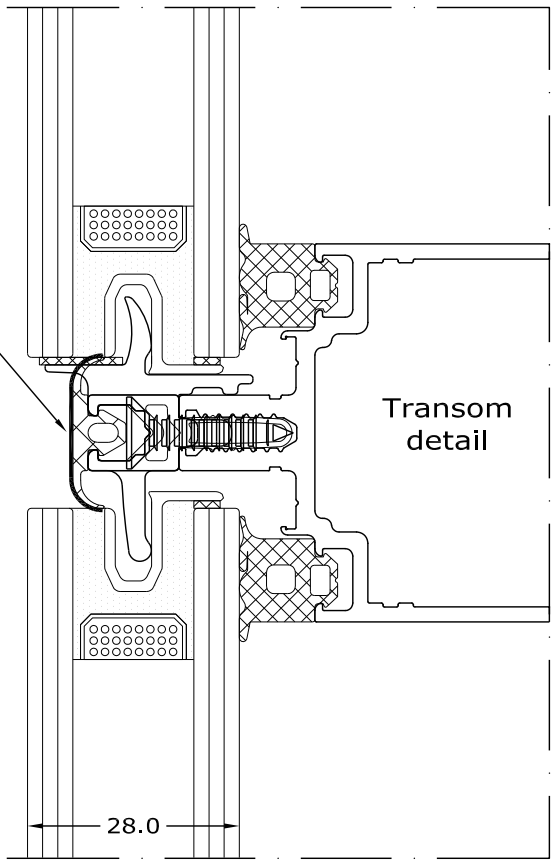

It is the silicone installers responsibility to supply and apply a suitable bond breaker tape and silicone seal.

A warranty on the silicone seal should be obtained from the silicone installer company.

comar
ARCHITECTURAL ALUMINIUM SYSTEMS

Changes reserved
Sous reserve de modifications
Änderungen vorbehalten

Issue: 04
Date : 01-14

Split mullion details

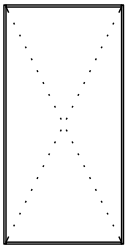

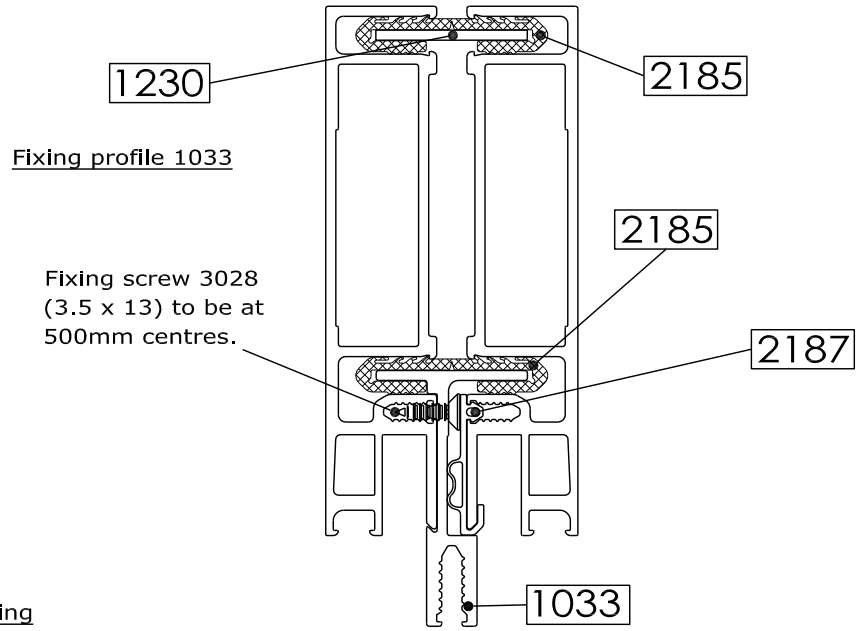

7.33

Mullion-transom fixing

For split mullions, either spring loaded cleats (2310) or precut transom cleats can be used to fix to the mullions.

Note: With spring loaded cleat 2310, the 45mm transom cannot be used with a split mullion.

Drainage diverter installation (for split mullions only)

Where a drainage diverter should be installed according to page 7.37, opposite sides of the drainage diverter must be cut away and positioned at 2 different transom levels.

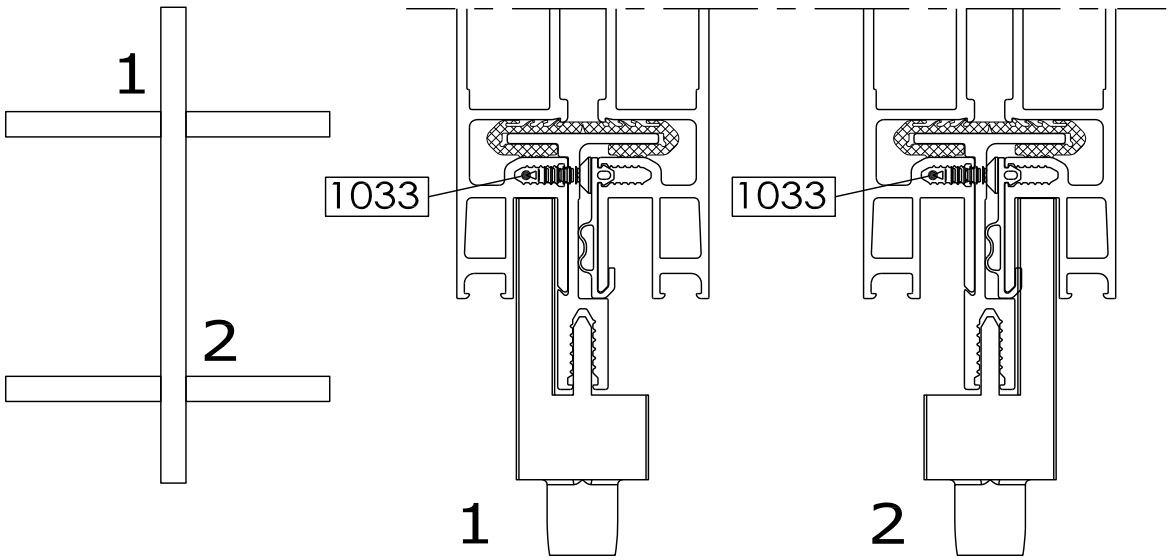

Changes reserved
Sous reserve de modifications
Änderungen vorbehalten

Issue: 04
Date : 01-14

comar
ARCHITECTURAL ALUMINIUM SYSTEMS

Comar 6EFT

Mullion-transom Connection options

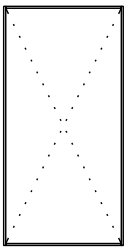

Option 1

Screws EFT-3021

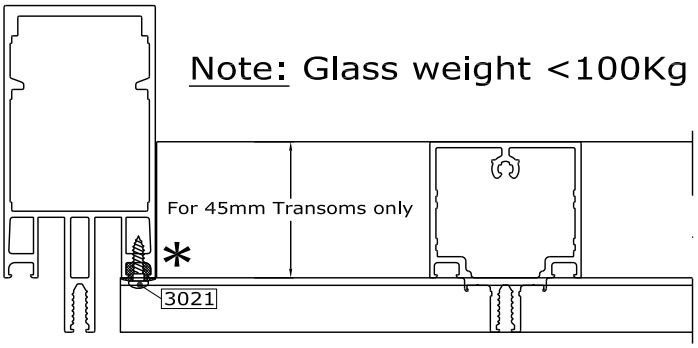

Note: Glass weight <100Kg

7.34

Ladders / units

Option 2

Spring loaded cleat
EFT-2310
or
Screw EFT-3022

Tooling: Com6-EFT-Jig1

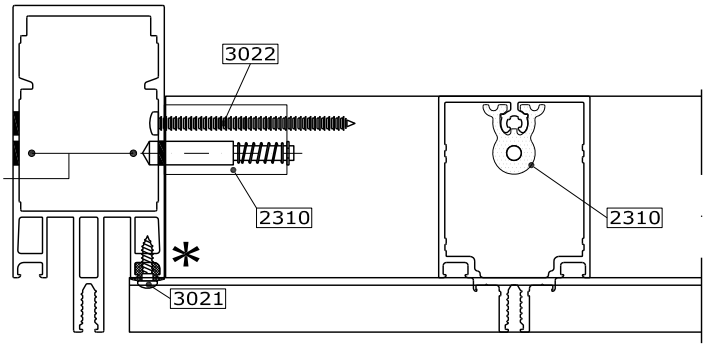

Option 3 or 3a

Precut & drill cleat
profile EFT-1300 to length
Refer to drawing 6.25

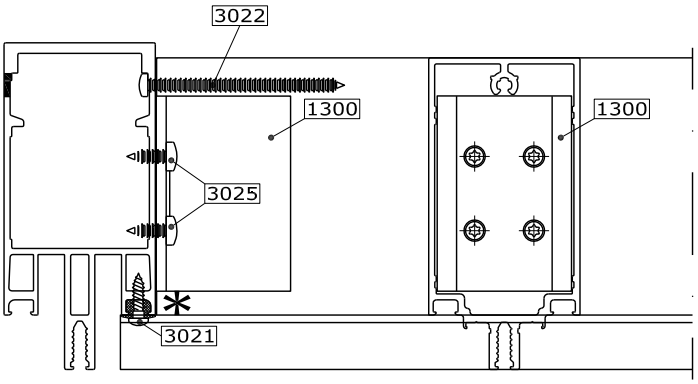

Option 4

For direct fix to steel details
refer to drawings 6.09, 6.11,
7.28, 7.29 & 7.30.

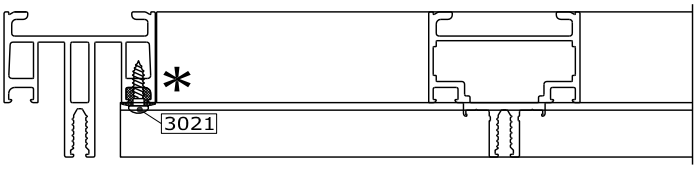

*

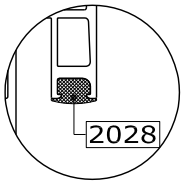

Transom seal EFT-2028 to be installed at each mullion-transom connection.

All screws to be sealed.

Fabricators Guide

comar
ARCHITECTURAL ALUMINIUM SYSTEMS

Changes reserved
Sous reserve de modifications
Änderungen vorbehalten

Issue: 04
Date : 01-14

Glazing adaptors

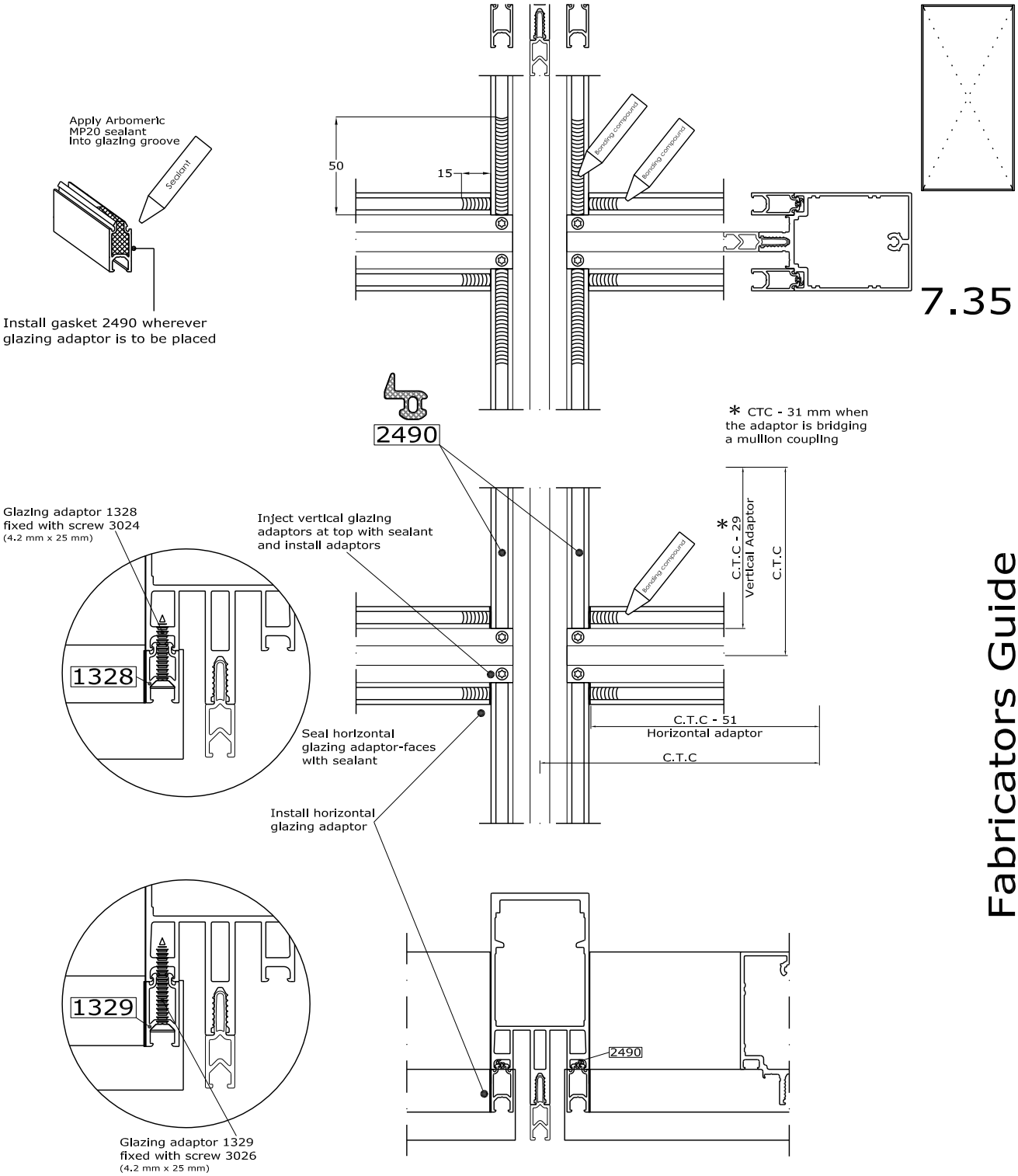

7.35

Fabricators Guide

Changes reserved
Sous reserve de modifications
Änderungen vorbehalten

Issue: 04
Date : 01-14

comar
ARCHITECTURAL ALUMINIUM SYSTEMS

Installation 7

Comar 6EFT

Internal gaskets & corners

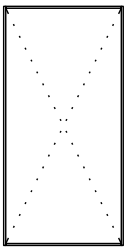

7.36

Apply bonding compound into glazing groove

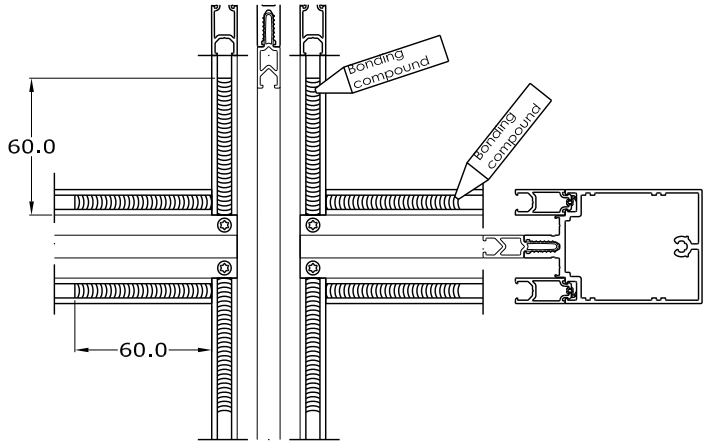

Install moulded gasket corners

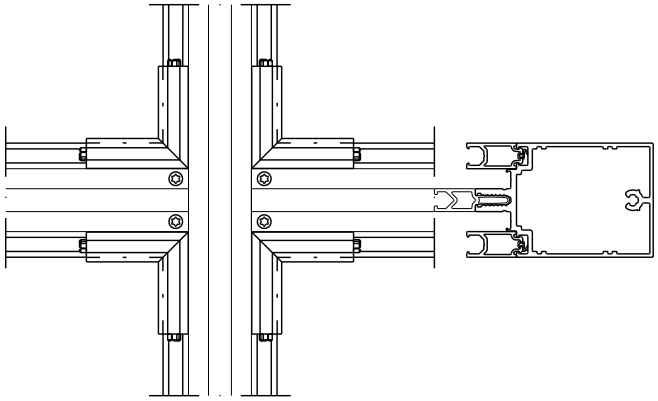

Cut EPDM glazing gasket to required length between corner mouldings +5% to ensure compression of the gaskets

Bond corner to gasket joints using EPDM bonding compound or a MS Polymer based sealant

Slide gasket into position and clean off excess sealant

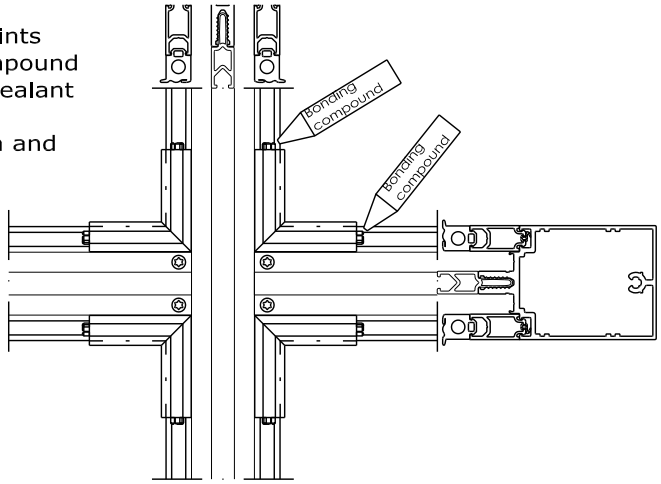

Fabricators Guide

comar
ARCHITECTURAL ALUMINIUM SYSTEMS

Changes reserved
Sous reserve de modifications
Änderungen vorbehalten

Issue: 04
Date : 01-14

Drainage diverter installation

Drainage diverters are to be installed:

- On each mullion at the transom joint nearest the ground.
- Upside down at the highest mullion-transom joint.
- Each mullion for the cruciform above each mullion joint.
- The mullion-transom joint above any doors.

Notes:

- A drainage diverter at every cruciform for zone drainage is optional.
- For 4 sided structural jobs, spout of drainage diverter to be cut back to 3mm long. Refer to page 7.41.
- For correct drainage diverter, refer to glazing charts in section 3.

Locate drainage diverter ensuring it is pushed back flush with the mullion

Inject sealant into hole in drainage diverter and ensure sealant covers all sides

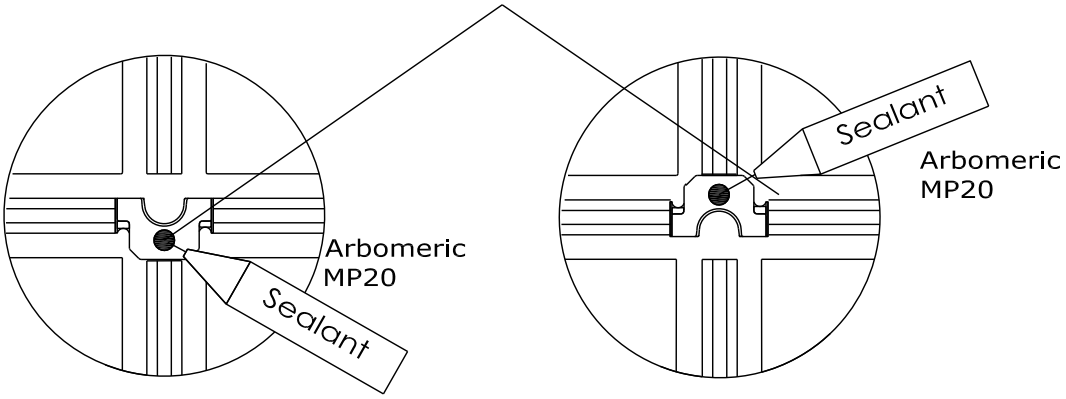

- Lowest mullion-transom joint
- Cruciform above each mullion joint
- At mullon-transom connection above doors

- Installed upside down at highest mullion-transom joint for curtain walling >3m in height

For 4 sided structural glazing screw weephole cover (2010) over each drainage diverter using screw 3023 (4.8x19).

Weephole cover to be installed the same way as normal in the case of an upside down drainage diverter. See page 7.41.

Thermal break installation

For correct isolator/thermal break, refer to glazing charts in section 3.

7.38

2 or 4 sided structural glazing

The thermal break must be cut to length between glass setting blocks and clamps.

Refer to pages 6.62 - 6.76 for details.

Isolator/thermal break to be sealed as shown below in all configurations.

Fabricators Guide

Where a drainage diverter is installed

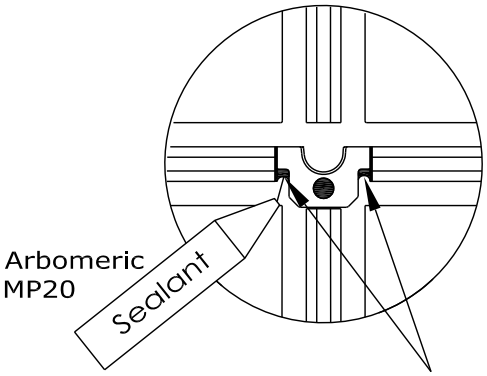

Apply sealant at both edges of transom-thermal break

Where no drainage diverter is installed

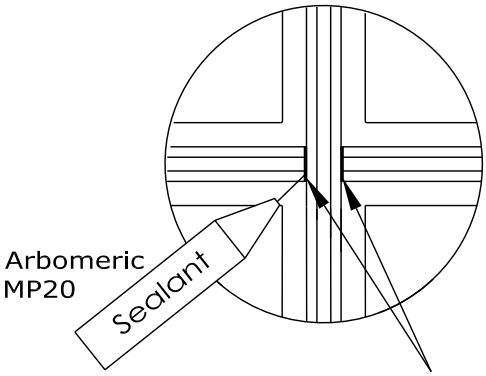

Apply sealant at both edges of transom-thermal break

Future Additions

FUTURE ADDITION

comar
ARCHITECTURAL ALUMINIUM SYSTEMS

Installation 7

Comar 6EFT

Mullion coupling 2030

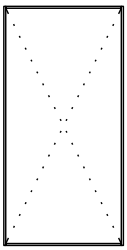

7.40

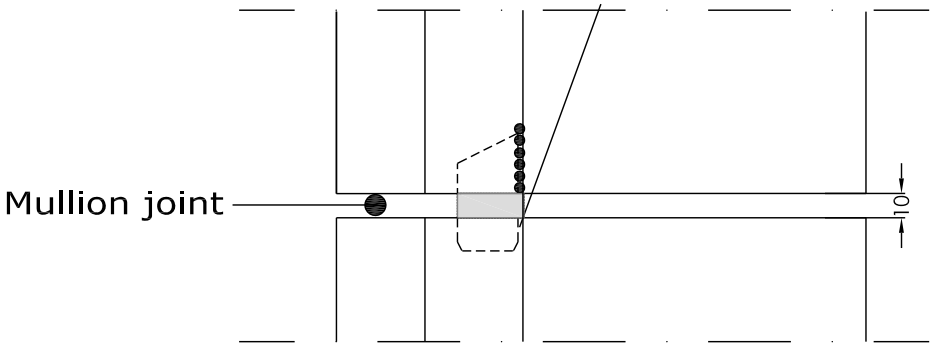

Fabricators Guide

Sealant to be applied at drainage channel in the upper mullion to all shown edges so the mullion coupling is sealed on all sides.

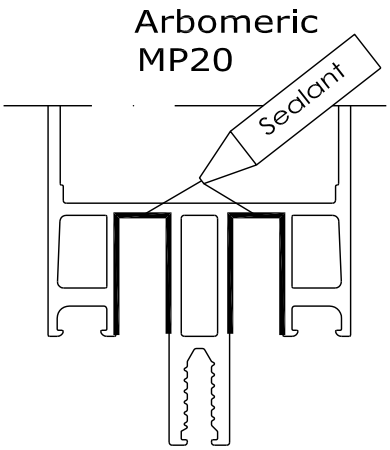

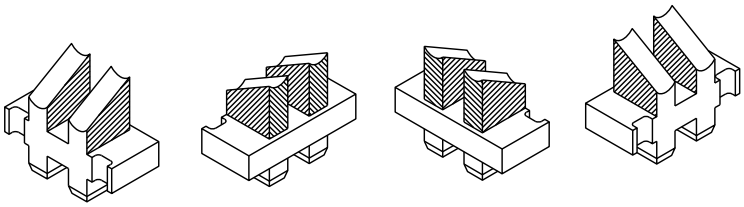

comar
ARCHITECTURAL ALUMINIUM SYSTEMS

Changes reserved
Sous reserve de modifications
Änderungen vorbehalten

Issue: 04
Date : 01-14

4sided SG weephole cover thermal break & drainage diverter details

Four sided structural glazing only

Thermal break to be cut as shown where a weephole cover is to be fitted over a drainage diverter.

TOP DETAIL

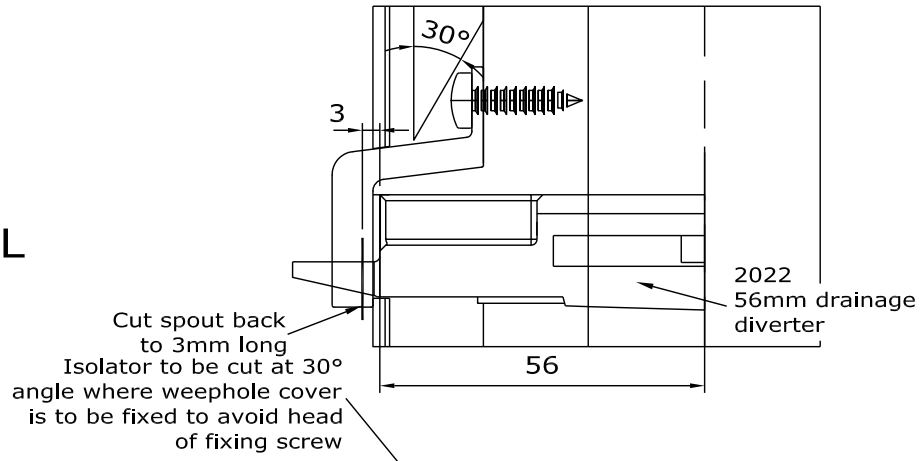

INTERMEDIATE DETAIL

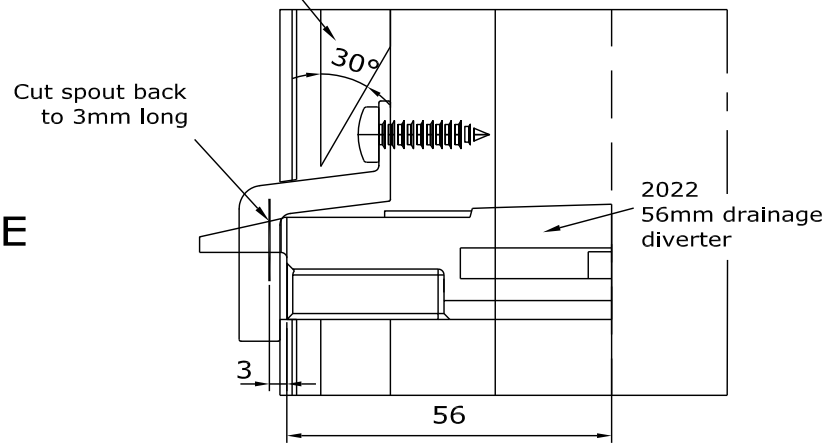

BOTTOM DETAIL

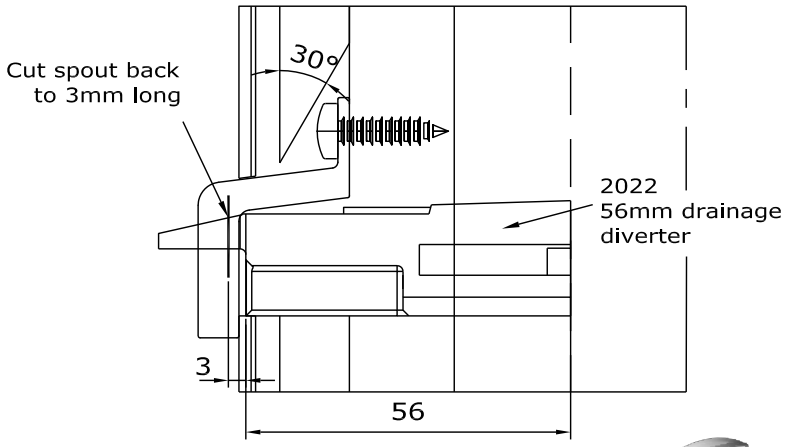

Changes reserved
Sous reserve de modifications
Änderungen vorbehalten

Issue: 04
Date : 01-14

comar
ARCHITECTURAL ALUMINIUM SYSTEMS

Comar 6EFT

Fixing adaptors 1264 & 1265

7.42

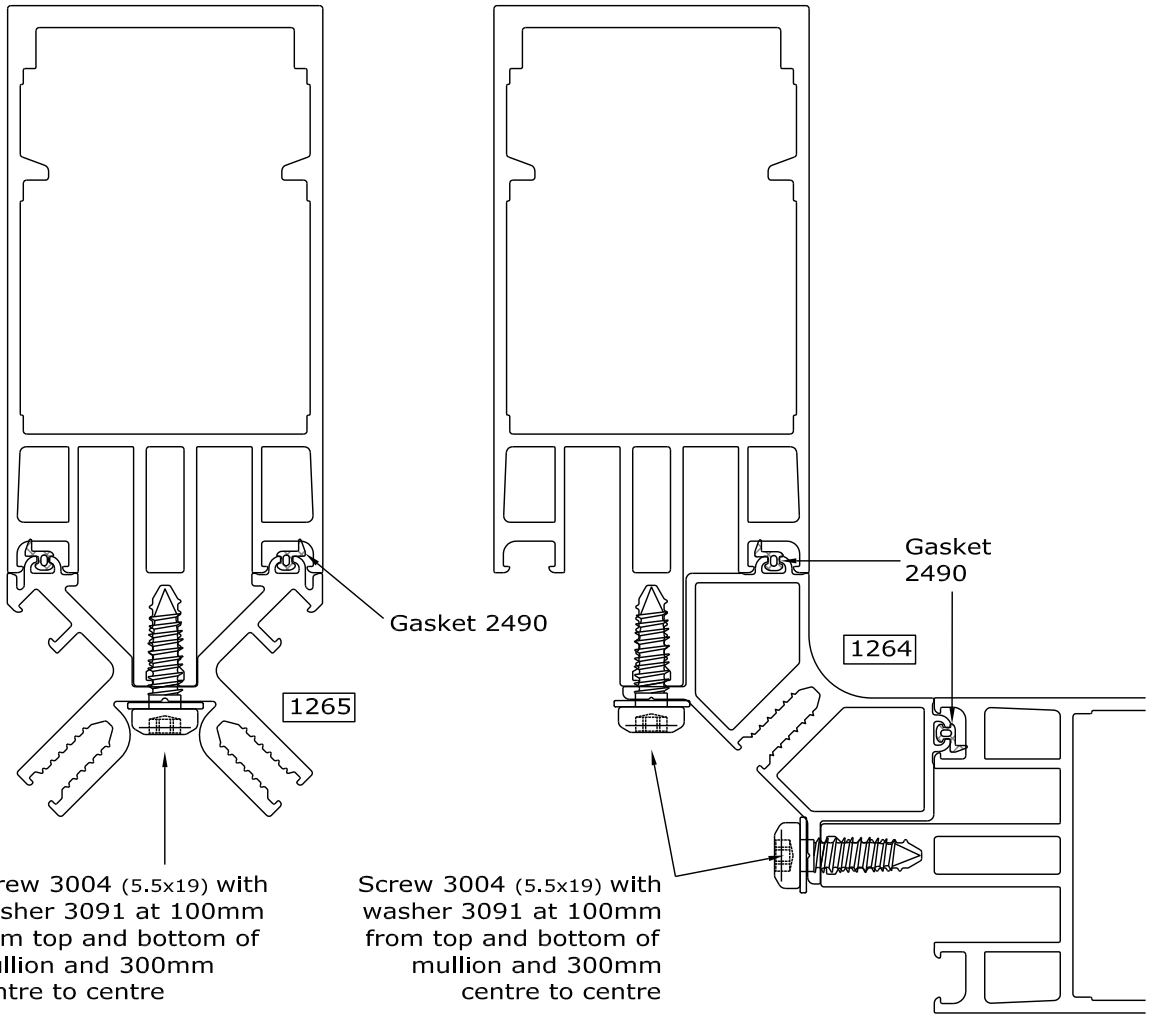

Future Additions

FUTURE ADDITION

Future Additions

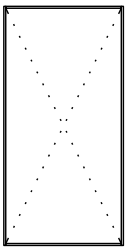

7.44-7.99

Profiles Identification

FUTURE ADDITION

comar
ARCHITECTURAL ALUMINIUM SYSTEMS

Changes reserved
Sous reserve de modifications
Änderungen vorbehalten

Issue: 04
Date : 09-14