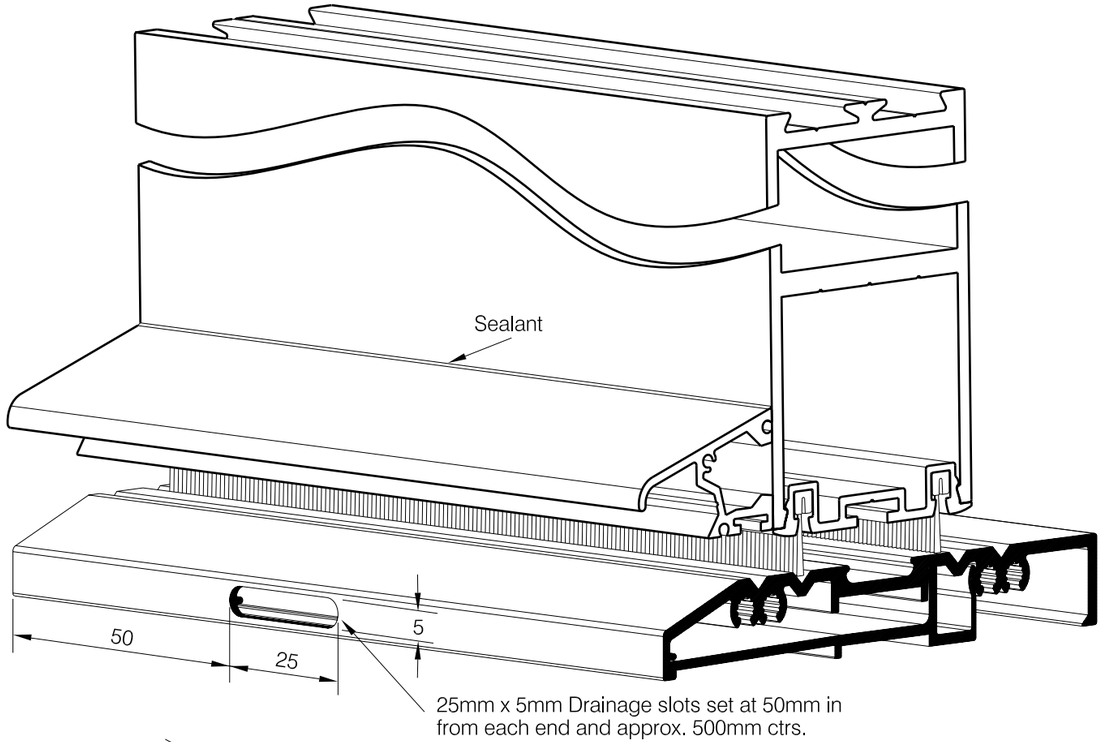

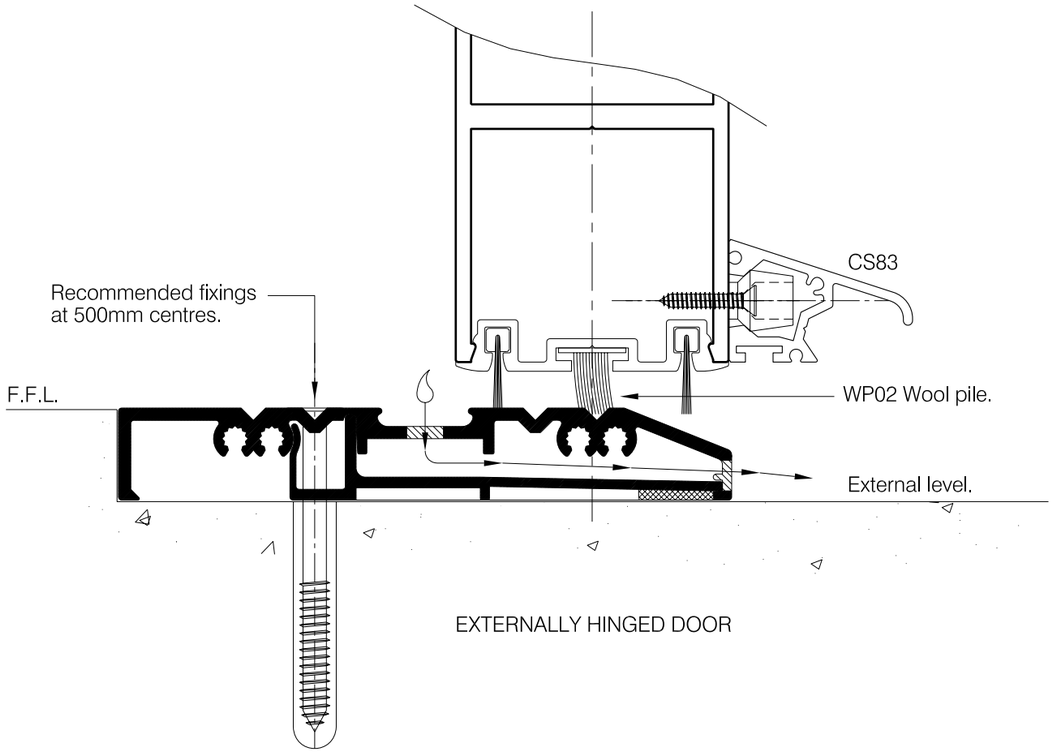

EXTERNALLY HINGED DOOR

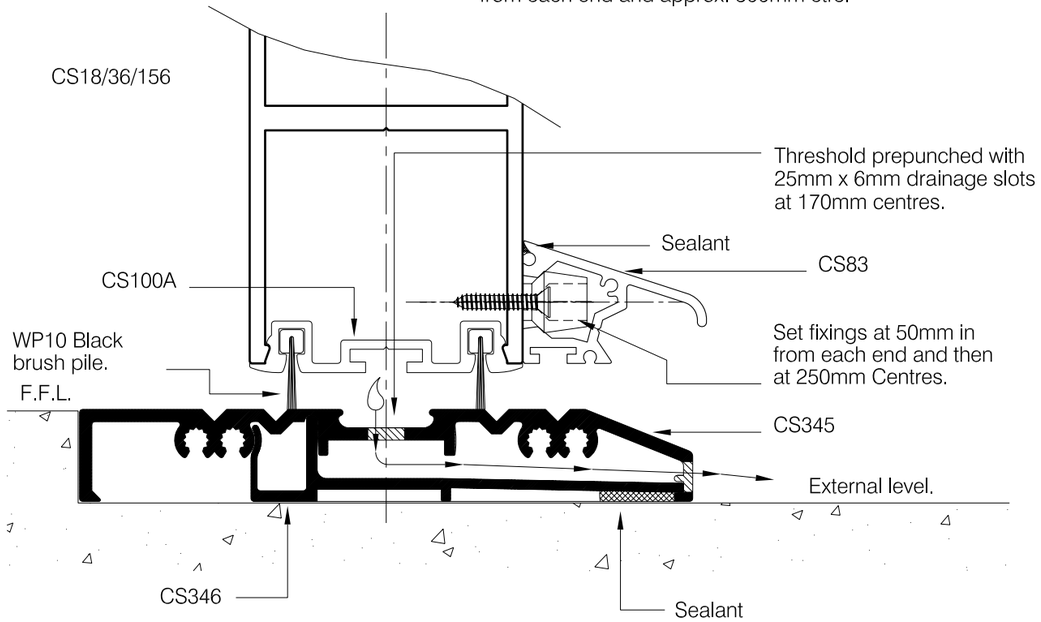

STD. CONFIGURATION OF CS345/346

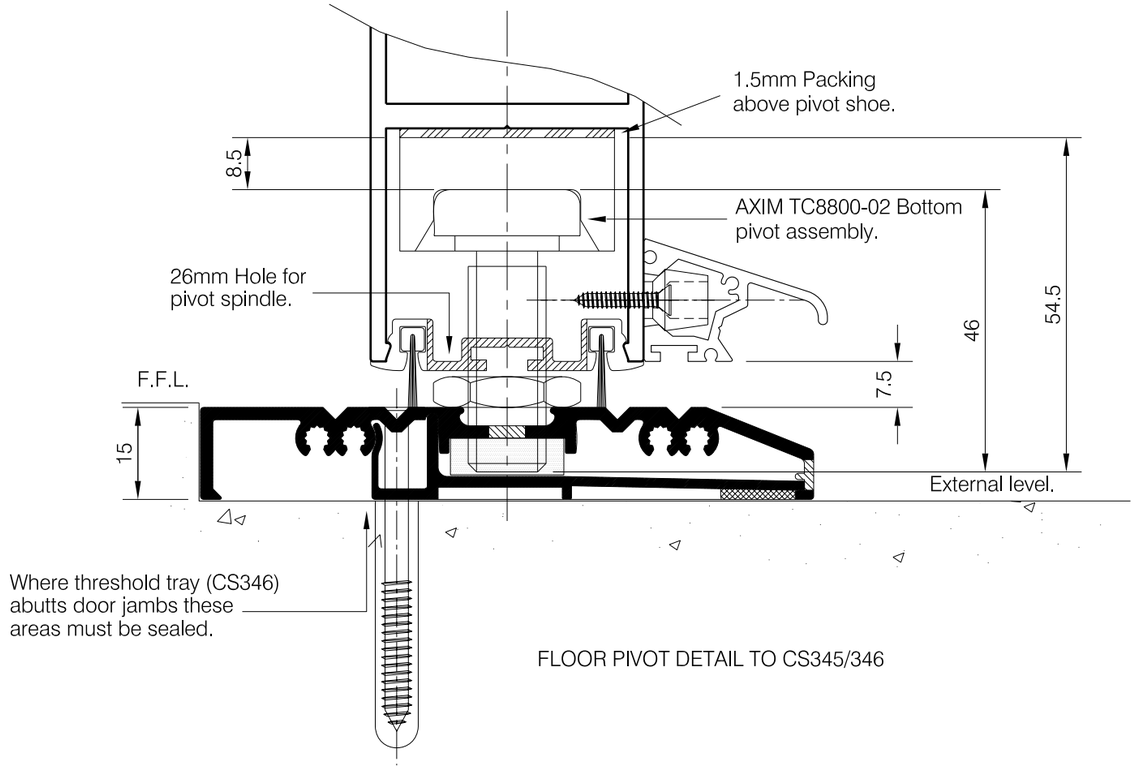

FLOOR PIVOT DETAIL TO CS345/346